BROADCAST
RECEIVERS
SCHEMATICS

Vintage Radio Identification SKETCH-BOOKS of D. H. MOORE

VOLUME II-B

The
Vintage Radio
Foundation®

P.O. BOX 521
PALO ALTO, CALIFORNIA
94302

© D.H.MOORE, 1954/1985

ALL RIGHTS RESERVED UNDER INTERNATIONAL AND PAN-AMERICAN COPYRIGHT CONVENTIONS, INCLUDING TRANSLATION INTO SCANDANAVIAN LANGUAGES. REPRODUCTION IN ANY FORM IS EXPRESSLY FORBIDDEN WITHOUT EXPRESS PERMISSION FROM THE AUTHOR.

TO ADVANCE THE WONDER & THE MAGIC OF EARLY RADIO
THROUGH THE COLLECTION, EVALUATION, & DISSEMINATION
OF INFORMATION.

DEDICATION

...to a way of life -
that should not have
been forgotten.

Autographed Edition

It is my sincerest wish that this latest contribution of my vintage radio writings may afford you as much enjoyment and usefulness as I've had in compiling it.

Over to you, and 73,

Palo Alto

Contents

(Volume II-B)

Frontispiece

Gernsback's Interflex..... 1
Gernsback's Megadyne..... 9
Gernsback's Peridyne..... 4

Lan-Sing TRF..... 10
Leutz Seven-Seas..... 13
Leutz Super-Pliodyne..... 11
Leutz Transoceanic..... 14
Lynch Audio Decks..... 15
Lynch National Five..... 21
Lynch Universal Receiver..... 22

Madison-Moore Super-Het..... 25
Madison-Moore One-Spot..... 29
Madison-Moore International.. 31
Magnaformer 8-9..... 33
Magnavox TRF-5 & TRF-50..... 24
Marcodyne No. 1..... 38
Marcodyne No. 2..... 39
Marcodyne No. 3..... 41
Marconi 3-Tube Receiver..... 61
Mazda Cosomello Jr..... 43
Midget TRF Portable..... 44
Mohawk Navajo 5..... 52
Morris Simplicity..... 50
Melo-Heald Eleven Super-Het.. 54
Multi-Valve Circuit..... 62
Mu-Rad MA-15..... 48
Mu-Rad Super-Six..... 46
Music Master-Ware Reflex..... 45

Na-Ald Localised Control..... 56
Neutrodyne Reflexing..... 76
Newspaper Radios..... 63
Norden-Hauck Super DX, 1928.. 70
Norden-Hauck Super DX, 1930.. 71

Paragon Model RB-2..... 79
Pierce-Aero Model B..... 73
Pierce-Aero Model 24-45..... 79

On Portable Configurations.... 79
Portables: Powertone..... 80
Pressley-Sangamo... 81
Tom Thumb..... 82
Powertone/Bruno..... 83

Quadraformer, The..... 85
Quadraformer VI..... 93
Quadraformer Superola..... 89

Radiola 16..... 95
Radiola 26..... 96
Radiola Super-Het..... 103
Radiola VI AR-895..... 99
Radiola VIII AR-810..... 101
RCA AP-777-C Pwr. Amplifier... 105
RCA Catacomb Notations..... 101
RCA-Electrola 64..... 106
RCA Pocket Receiver..... 109
Rauland IF Amplifier..... 110
Rauland R-2 Neutrodyne..... 110
Raven Super-Het Notation..... 112
Regenerative Pre-Selectors.... 114
Remler Infradyne..... 115
R-W AC-300..... 116

Samson DeLuxe T-C..... 129
Samson T-C Receiver..... 118
Samson T-C Coil Connexiona.... 124
Samson T-C AF Amplifiers..... 122
Samson T-C Final Version..... 126
Samson T-C, Sleeper's Version. 125
Samson 3-Tube TRF..... 120
Sargent-Rayment Six..... 136
Sargent-Rayment Seven..... 137
Schnell Tuner..... 139
Shamrock Model 4166..... 140
Sickles 4-Tube Receiver..... 146
Shodron Tra-Circuit..... 145
St. James Receivers..... 141
Sparton 5-15/5-26..... 152
Splitdorff Polonaise..... 148
Splitdorff Abbey..... 151
Splitdorff 171 Abbey..... 151
Splitdorff R-200..... 150
Splitdorff R-500..... 149
Standardyne Multi-Valve Set... 155

Sterling Miniature Rcvr..... 159
Stewart-Warner R-100-A/-B.... 161
Stewart-Warner 310/325..... 163
Stromberg-Carlson 635/636.... 177
Stromberg-Carlson Neutrodyne. 164
Stromberg-Carlson Model 1-B.. 165
Stromberg-Carlson 601-A/-B... 166

Thermiodyne TF-5..... 190
Thompson Minuet R-81..... 180
Thordarson Q.S.A. 5..... 192
Thorola Toroidal Coil Set.... 191
Toroidal Coil TRF..... 194
Travel-Ler TRF..... 195
Tuft College D-Coil Rcvr..... 198
Typical Regen. Neutrodyne.... 199

UHF (GB) 2-Tube Receiver..... 200
Unidyne/Solodyne (GB)..... 203
Uzmann Long-Wave Receiver.... 204

Wade-Thordarson Receiver..... 205
Walbert Isofarad 1926/1927... 207
Walbert Isolodyne..... 209
Walker Multi-Unit..... 212
White-Loftin 3-Tube Circuit.. 191
Work-Rite Neutrodyne..... 217

Zenith Super Midget..... 221

* * *
* *
*

NOTES:

1. Volume II-A has its own Table of Contents.

2. For a listing of seperate Monographs on individual marques, see back cover.

* * *
* *
*

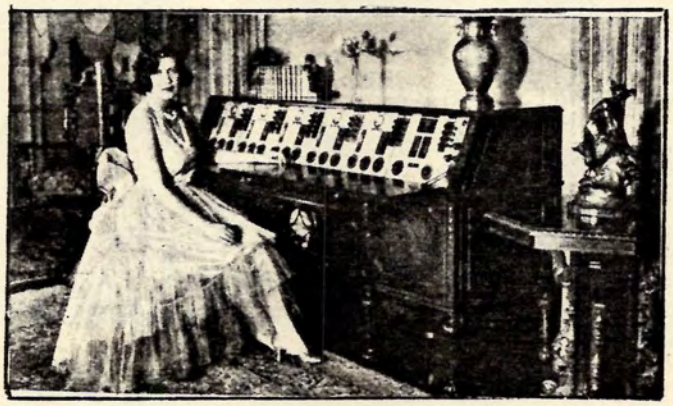

A rather esoteric installation of the Leutz "Silver Ghost", obviously in a wealthy man's home, but the young lady in the ball-room gown strikes an incongruous note, It would be difficult to imagine her running up and down, twirling knobs, while her young chums are waiting behind her to get on with a dance. This is, I feel, pushing the human side of Radio a bit too far, but the cut undoubtedly caught the eye of even casual readers of RADIO NEWS, in which the cut first appeared. Oddly enough, Leutz never used it in their sales literature.

The Interflex Circuit

By HUGO GERNSBACK

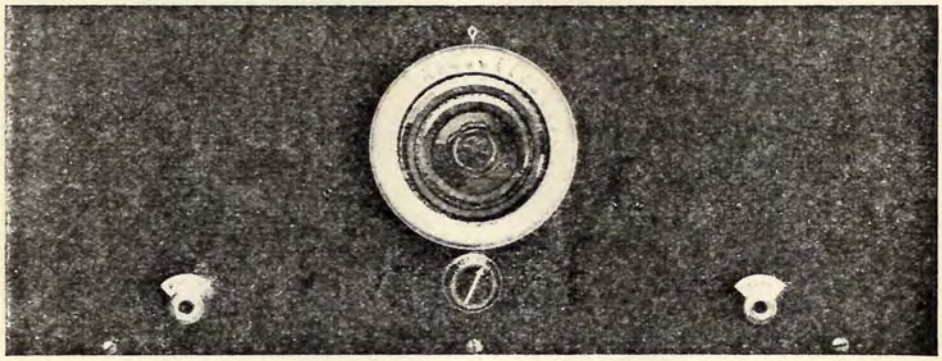

The "Interflex" circuit was briefly popular during 1925 and 1926, less because of its performance than Gernsback's reputation. It was simple to construct, required only two special parts - the coil and the Carborumdum fixed crystal detector (of which Gernsback seems to have been inordinately fond, in that he used it in several of his circuits).

Having constructed this circuit, it was immediately apparent as to why its popularity did not endure - it had a tendency to howl at certain frequencies. Gernsback was, we must assume, aware of the problem for in 1926 he designed the "Flexocoupler", which was essentially the same coil shown here, with an adjustable tickler, as shown on the pages defining the "Peridyne Five". Later, for the "Peridyne Five", he enclosed the "Flexocoupler" in a shield.

The principle of the coil was not new with Gernsback, as it had been used by Fitch for his "Tropodyne" RF amplifiers, Braxton-King, and in a more elabourate form by Sargent in his #700 amplifier for the "Infradyne" series. This, of course, was not to Gernsback's discredit, as it tends to emphasise the driven dedication of the man to Radio.

I also found that a strong signal would knock out the crystal detector, and it took a few minutes to re-establish resonance. One could replace the crystal with a conventional 01A as a detector, but then, one would not experience what our early home-constructors experienced; it would also require a larger base-board to accomodate the extra tube socket.

GERNSBACK's "INTERFLEX FOUR", 1925; Sht. 2

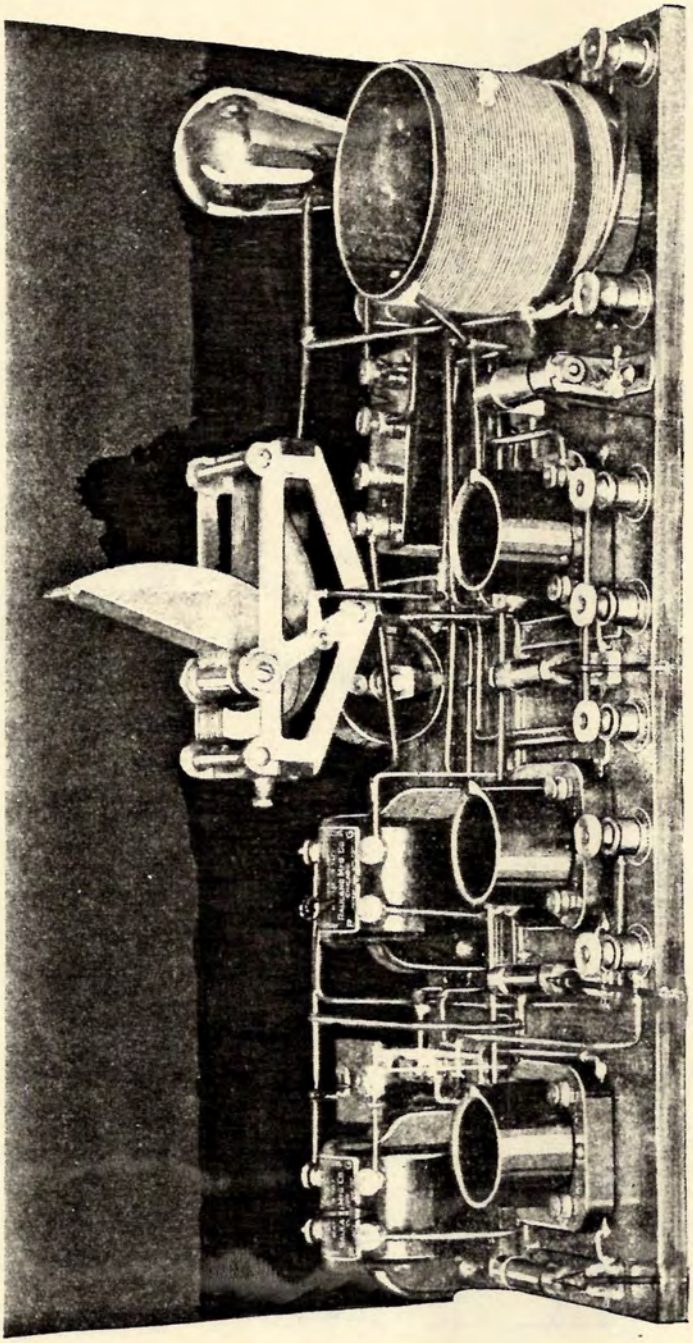

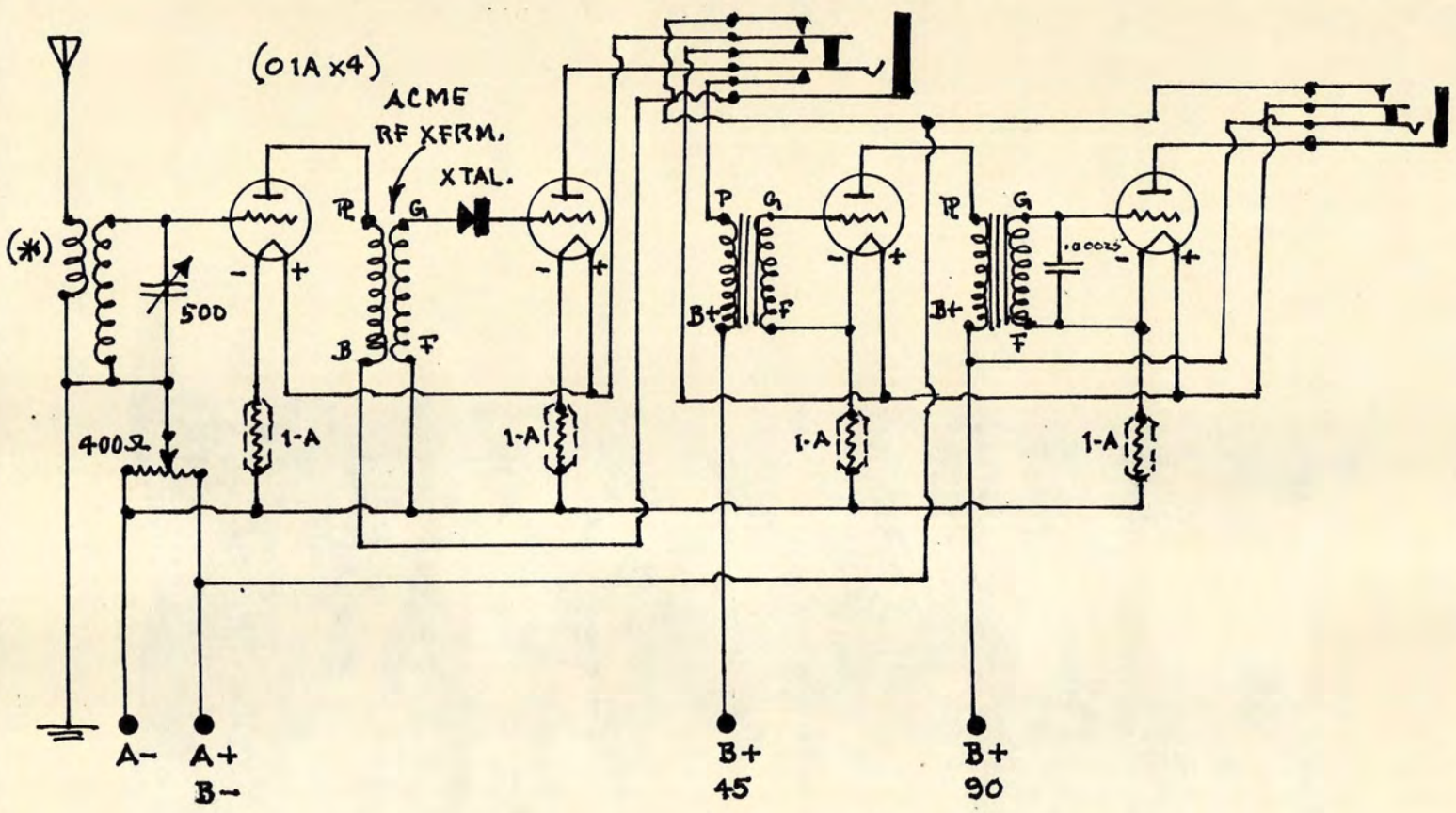

(*) = Form 3"Ø x 3" Long.
50 T #20 DCC (SEC).
6 to 10 T #20 DCC on
same form for ANT.

Panel = 7" x 18".
(4) Amperites As Shown.
"Accuratune" Vernier Dial.
Carborundum Fixed Crystal.

NOTE: the Crystal can be knocked out on a strong signal.

GERNSBACK's "INTERFLEX FOUR", 1925; Sht.3

The Peridyne

Designed by Hugo Gernsback

In the winter of 1927-1928, Gernsback released the details of his latest circuit, which he had been experimenting with for a year. It was called the "Peridyne Five", and is detailed here.

The Flexocoupler

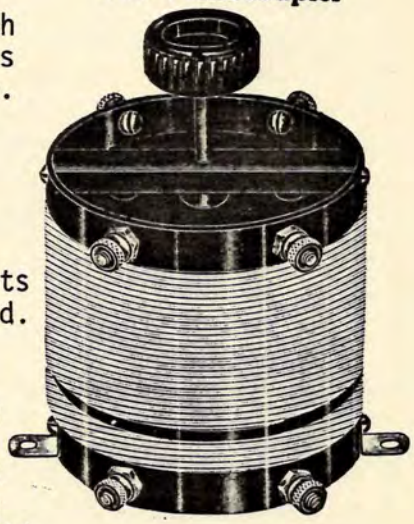

The Peridyne was an outgrowth of his earlier "Interflex", as a study of the Flexocoupler and the Peridyne unit will suggest. Due to his name and reputation, the Peridyne was touted by several mail-order houses, and the parts were contracted by Silver-Marshall and Hammarlund.

The "Peridyne"

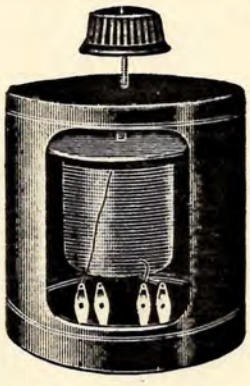

After the collapse of his media empire in the Spring of 1929, it would be a few years before Gernsback returned to the publishing of radio media, which he did with Radio Craft and, a bit later, Short-Wave Craft. This is mentioned simply because the Peridyne seems to have been his last legitimate radio circuit. He designed the "Tetradyne" for readers of Radio Craft, but close inspection suggests that it was more of a novelty circuit than a serious effort.

The Peridyne units were engineeringly sound, and the original units do occasionally turn-up at swap-meets, and would be worth picking-up, if only to experiment with. And because the "Peridyne Principle", as Gernsback termed it, could not be shown by conventional electrical symbols, he invented a new one, shown in the lower right-hand corner of this page. It didn't catch-on, and was not included in the various text-books on such things.

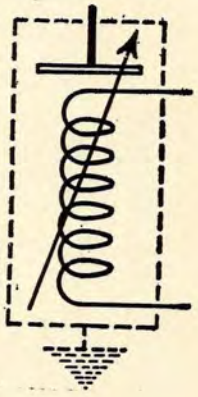

Stated simply, the point of the Peridyne was that it allowed perfect inter-stage resonance on a single control with a 3-gang variable condenser.

The Peridyne was not the howling success that Gernsback had predicted for it, due to several reasons. Its lack of success among the home-constructing fraternity, which is not the same as saying it was a failure, was due mainly to the following:

The set was simply too critical of adjustment.

A turn of one-sixty-fourth of an inch could cancel out a signal. The thread of the adjusting knob was 6-32 or 8-32, which obviously required a very delicate touch. The grounded shield of the unit had to be truly grounded, with no possibility of working loose; and the unit worked best with air-core RF transformers. An indoor aerial was recommended, and a 100' wire outdoors, if you lived in a rural area. Also, adjusting the Peridyne units could only be done when tuning in a distant station. The carborundum crystal detector (also used in Gernsback's "Interflex") was best in only one direction (orientation), and filament voltage was quite critical. A quarter-turn of either rheostat would send the set into wild oscillation, or silence it completely. Human nature being what it is, the home-constructor of the Twenties was no more patient or precise than his modern counterpart.

However, let it be said that if the Peridyne Five was properly tuned, it worked like a bomb, as they say.

As suggested, if you come by the three Peridyne units, by all means have a go at constructing the set. You will find that it will be an interesting as well as educational experience, and - who knows? - you might have the perfect touch for adjusting the units.

Also, as a matter of academic interest, you might care to look into the principle and construction of Fitch's "Tropodyne" encased RF transformers - which also employed the principle of changing the capacitance within a box by raising or lowering the Primary. The Tropodyne is detailed elsewhere.

* * *
* *
*

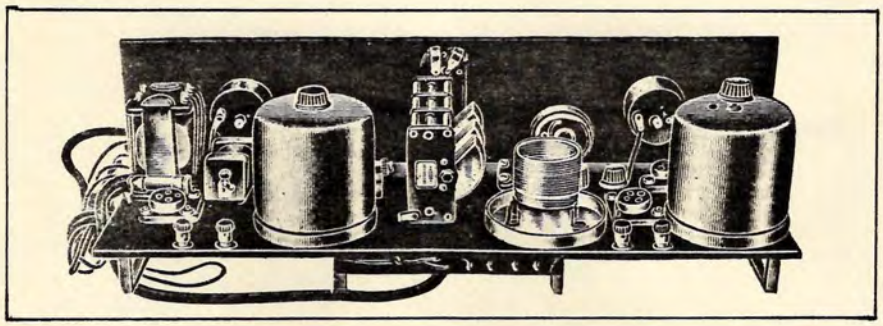

GERNSBACK's "PERIDYNE FIVE"

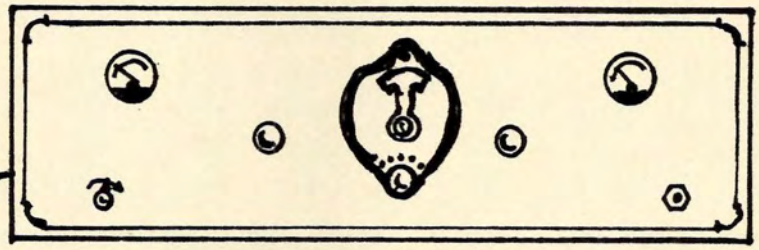

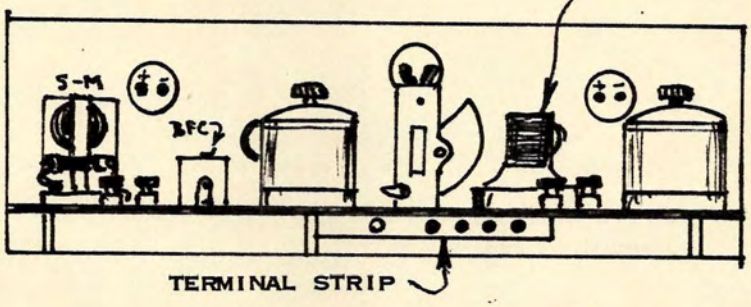

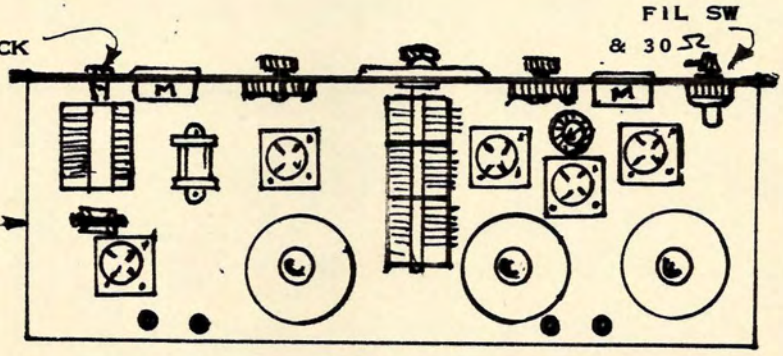

PLAN VIEW

THE "PERIDYNE" FIVE RECEIVER

Designed by Mr. HUGO GERNSBACK, Editor, "Radio News"

PERIDYNE FIVE PARTS LIST

3-Gang Variable Condebser	AMSCO
Hammarlund RF Coils (3)	Special
3:1 AF Transformers (2)	Silver-Marshall
Bradleystats (2)	Allen-Bradley
Amperites 1-A, 112	Radiall
RFC 85 mH	Samson
Single-circuit Jack	Yaxley
Double-circuit Jack	Yaxley
UX Sockets (5)	Benjamin
Binding Posts (4)	X-L
Voltmeter 0-8 VDC	Jewell
Voltmeter 0-150 VDC	Jewell
Carborundum Crystal Detector	Carborundum
Vernier Dial	National
.001 Fixed Condenser	Aerovox

Panel = 7" x 24"

Sub-Panel = 8" x 23"

Brackets 2" x 6½" (4)

Terminal Strip = 1" x 7.75"

Tubes: 01A (4), 12 or 12A (1)

The Peridyne shields, manufactured exactly to Mr. Gernsback's specifications, are available in kit form. The kit of three (S-M 639 Shield Kit) is priced at $6.00.

GERNSBACK's "MEGADYNE" B.C. RECEIVER, 1932

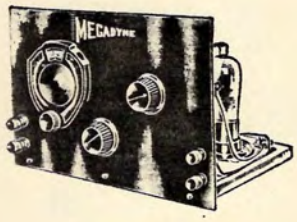

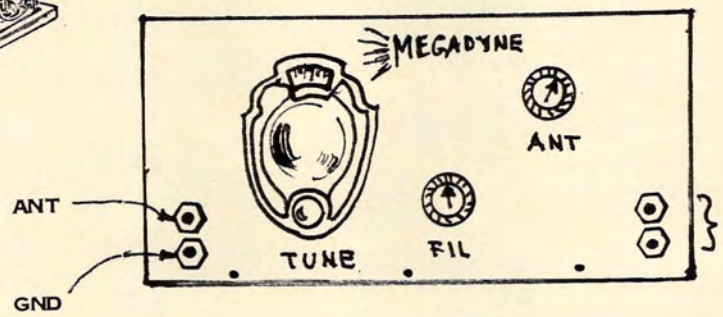

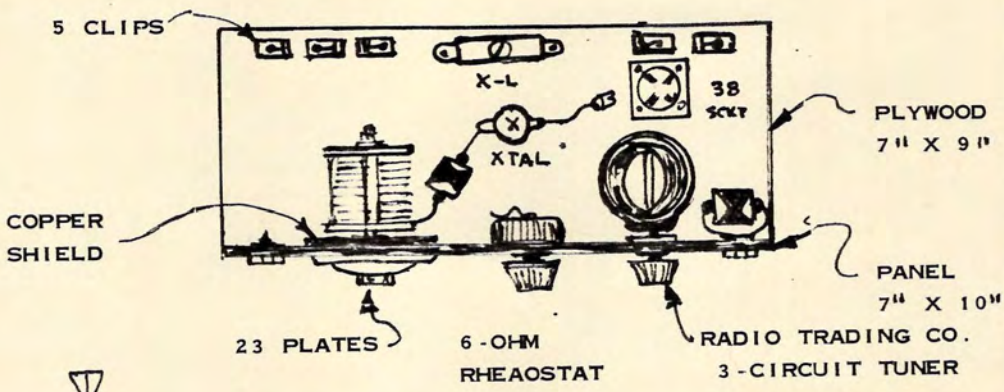

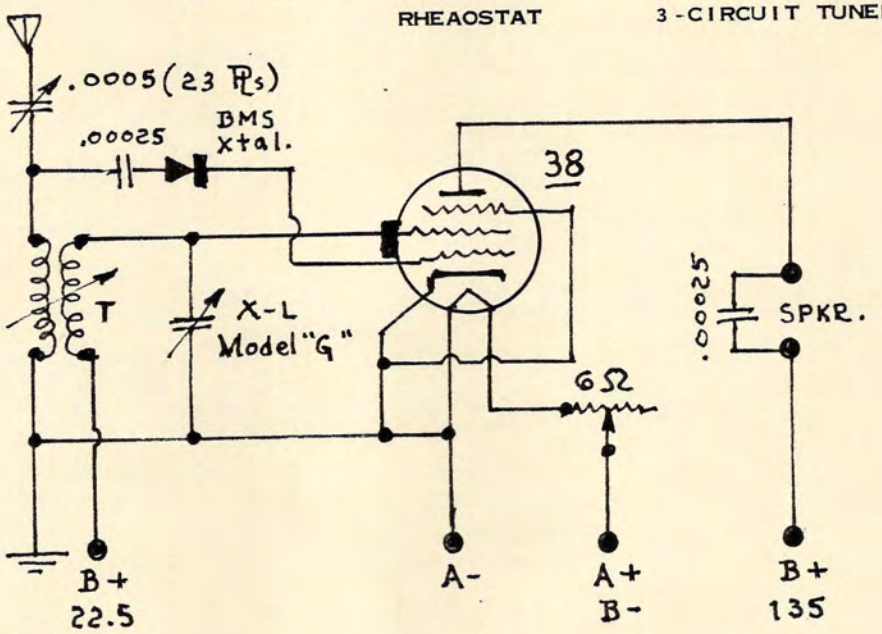

(RC 7-32/9-32)

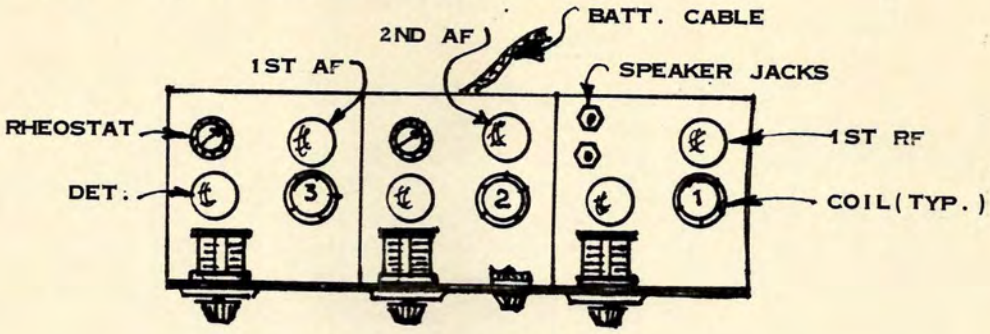

MODEL 80 & MODEL 100

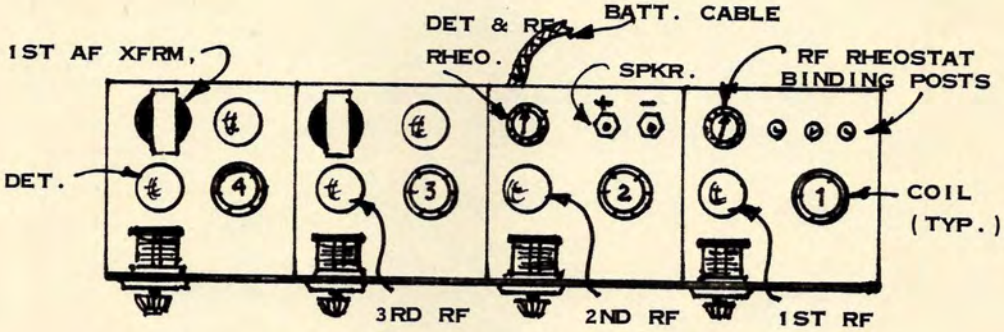

MODEL 150

The LAN-SING TRFs were manufactured by the United Engine Company of Lansing, Michigan, during 1926. No schematic seems to have been published. Ed Doughty of Freeland, Missouri, seems to have the only one extant. It was offered in five models, ranging in price from $60 to $200, in a 30" mahogany cabinet, with battery compartments at each end. It was a competent receiver, and the use of compartmentisation was unusual at that time.

GOLDEN-LEUTZ "SUPER-PLIODYNE 9",1925: Sht.1

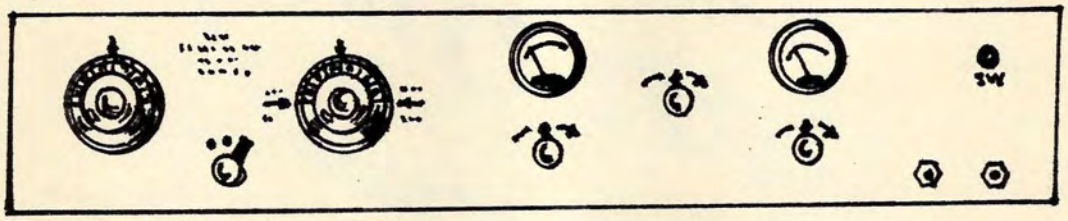

The Pliodyne circuit was designed by Chas. Leutz in 1924, and became commercial in 1925. The altercations between Leutz and The Octupus is part of the history of early radio, and need not be repeated here. Despite the extraordinary panel length, and a total weight of 65 pounds, the circuit shown worked exceedingly well. The totally enclosed or shielded cabinet was something new at the time, and naturally was immediately adopted by lesser manufacturers. If you do not have the Leutz book on the principles of the super-het, you should have. The general specifications of the "Super-Pliodyne 9" are as follows:

.6 stages of tuned RF; 5 were neutralised.
2 stages of AF amplification.
Detector - with all tubes 01A's.
5-gang variable condenser, 500 mmf each sexion.
3 variable resistors linked to neutralising condensers were in the range of 20K to 100K. The neutralising condensers were Chilton midgets.
Panel length = 40" x 8".
Chassis Over-all = 40" x 8" x ½".

COIL DATA: ALL COILS

RF PRI = 25 turns, #26 DCC, 1.75" ø form.
RF SEC = 100 turns, #26 DCC, 2" ø form.

The PRI was fitted inside the SEC. Spacing between the windings was 1/8th".

RANGE: 23 to 2800 Meters.

GOLDEN-LEUTZ "SUPER-PLIODYNE 9", 1925; Sht. 2

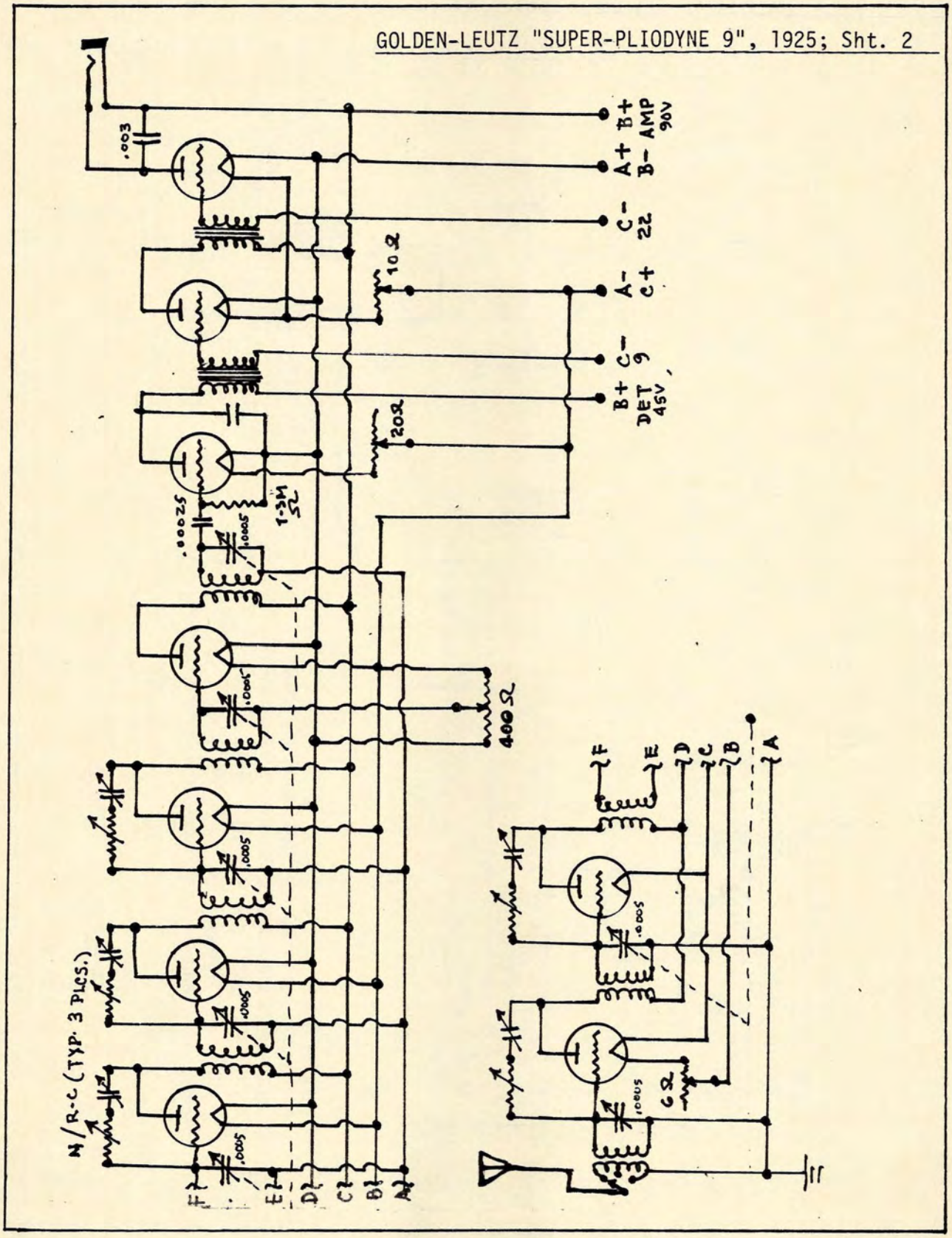

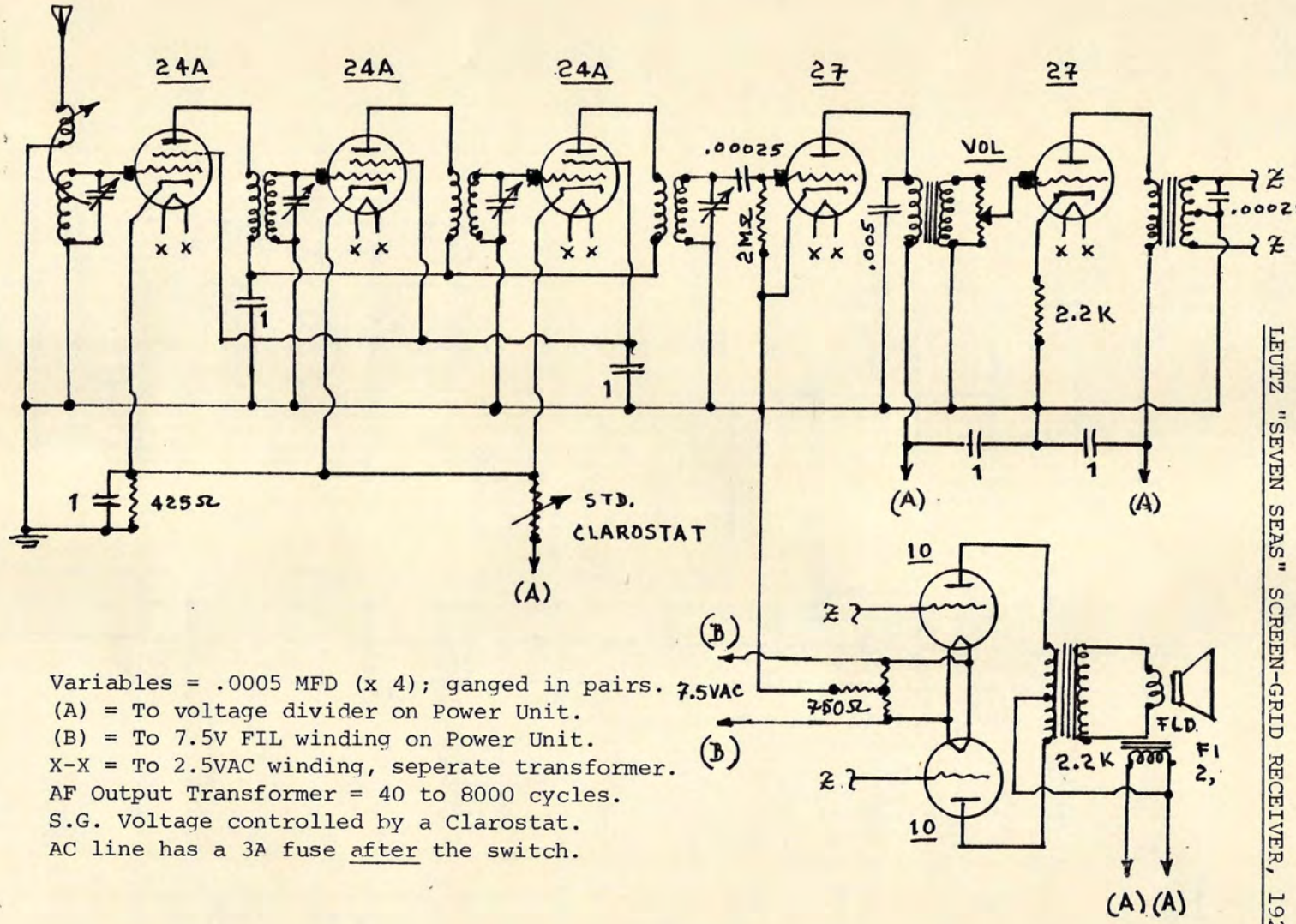

Variables = .0005 MFD (x 4); ganged in pairs.
(A) = To voltage divider on Power Unit.
(B) = To 7.5V FIL winding on Power Unit.
X-X = To 2.5VAC winding, seperate transformer.
AF Output Transformer = 40 to 8000 cycles.
S.G. Voltage controlled by a Clarostat.
AC line has a 3A fuse after the switch.

LEUTZ "SEVEN SEAS" SCREEN-GRID RECEIVER, 1929

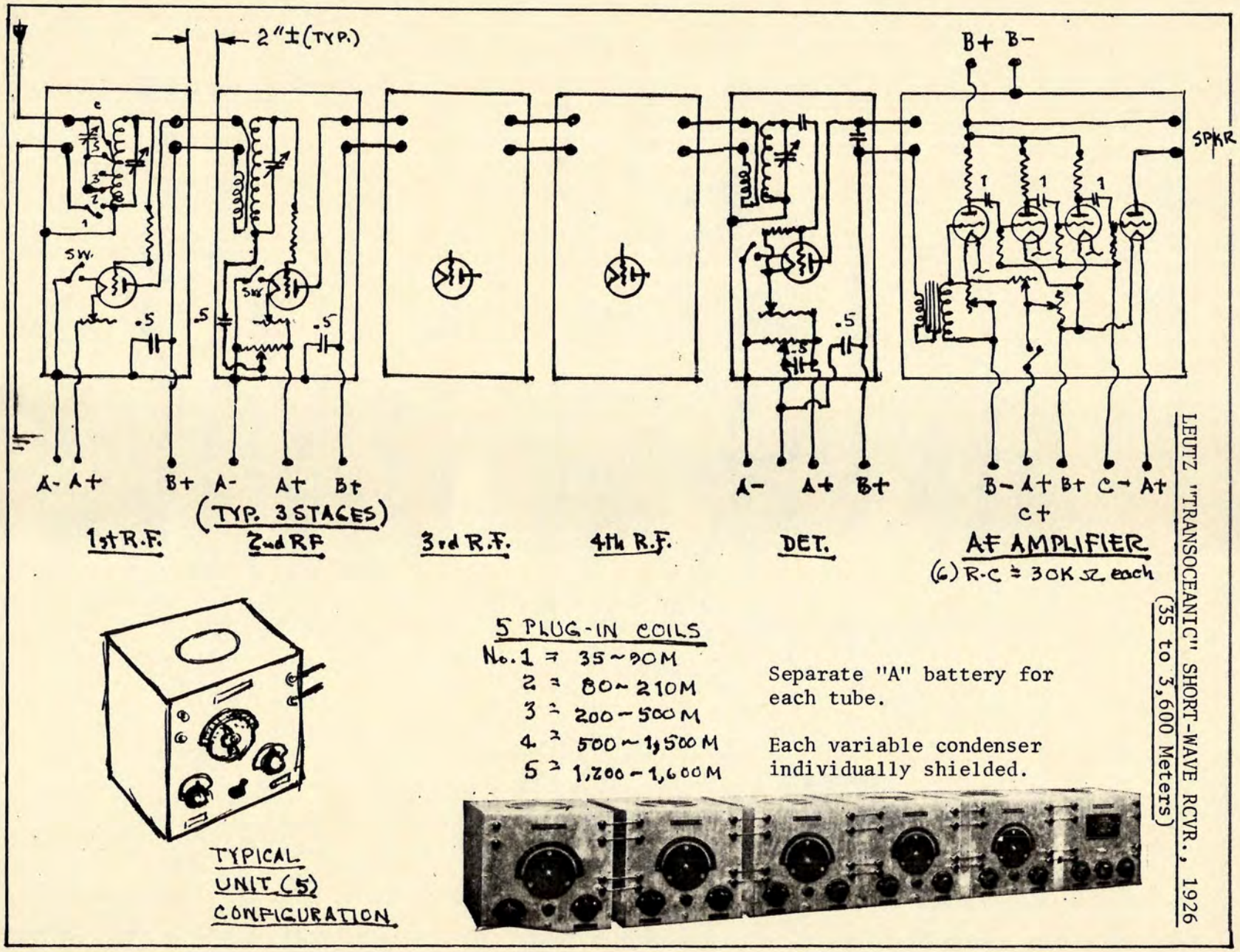

LEUTZ "TRANSOCEANIC" SHORT-WAVE RCVR., 1926 (35 to 3,600 Meters)

THE LYNCH DECK, 1928
This item was sold as
a pre-wired unit $12.

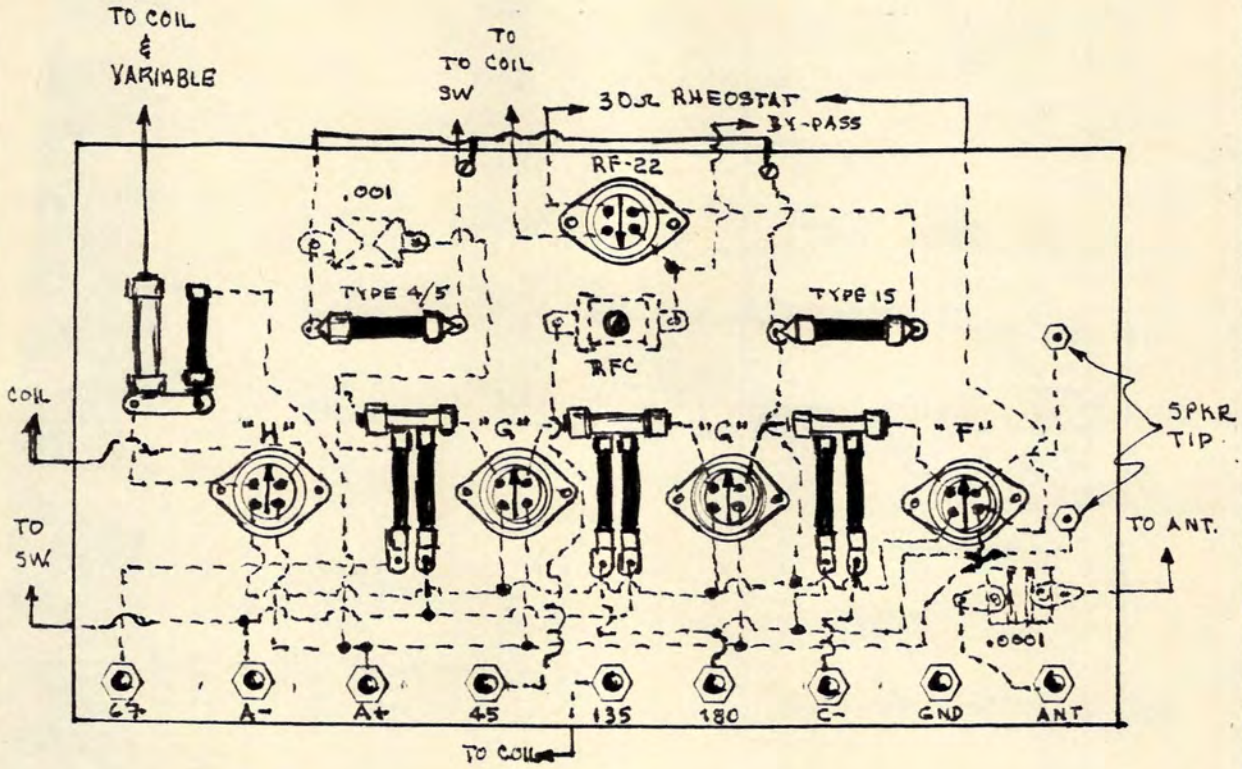

NOTES:

1. RFC = National 90 mH.
2. S-M Type 540 brackets supplied with unit.
3. Tubes recommended were Ce-Co.
4. Panel = 6" x 12" x ¼"; Micarta.
5. Total plate current = 15 mA, with 12A for AF.
6. Type numbers were Lynch "Equalizer" numbers, comparable to Amperite or Elkay for like tubes.

LYNCH DECK APPLICATION

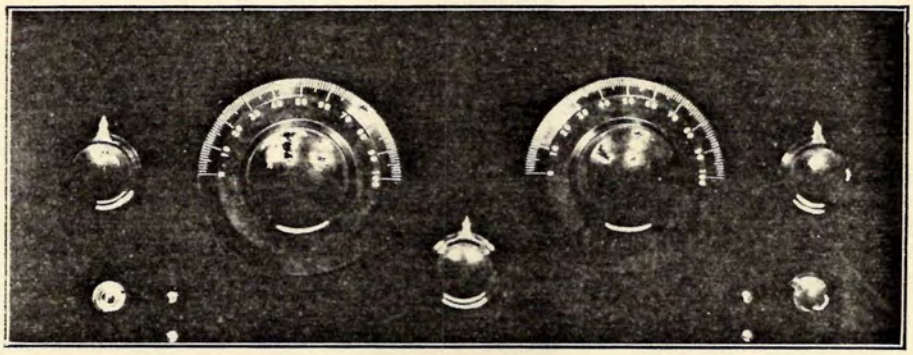

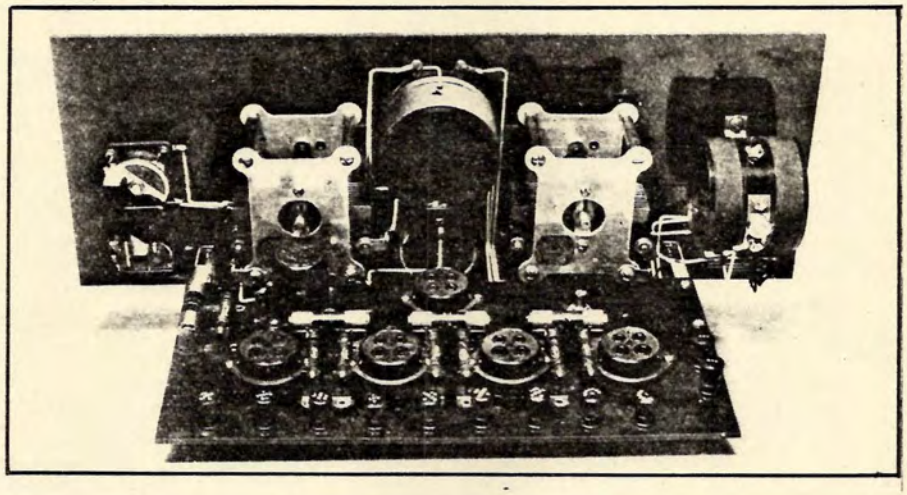

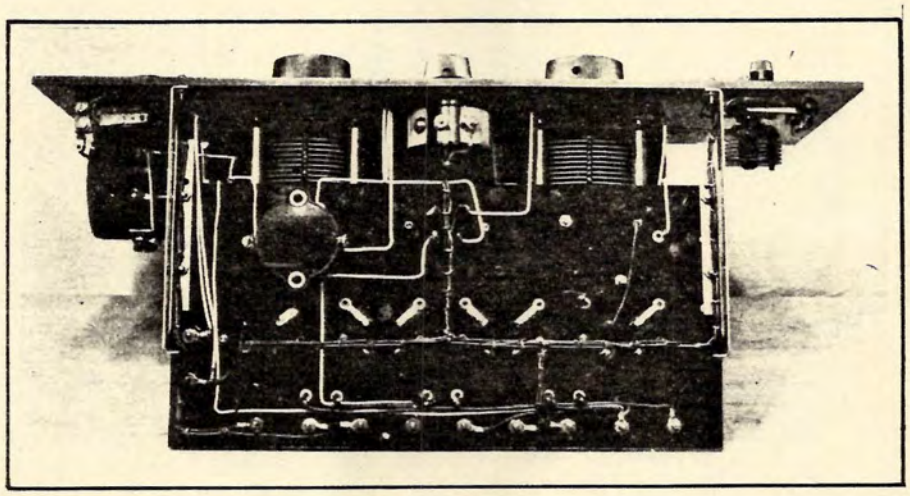

LYNCH DECK APPLICATION NO. 1, 1927

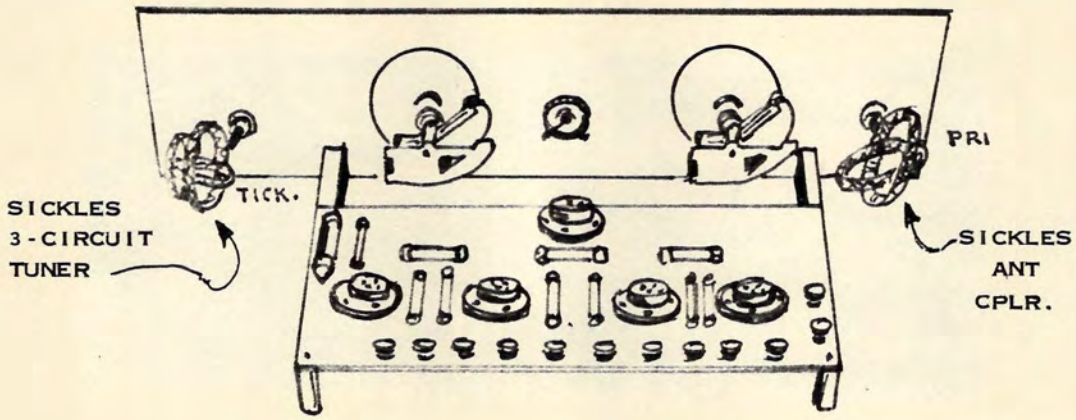

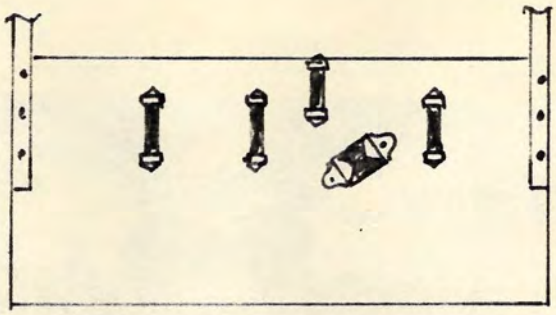

BOTTOM VIEW

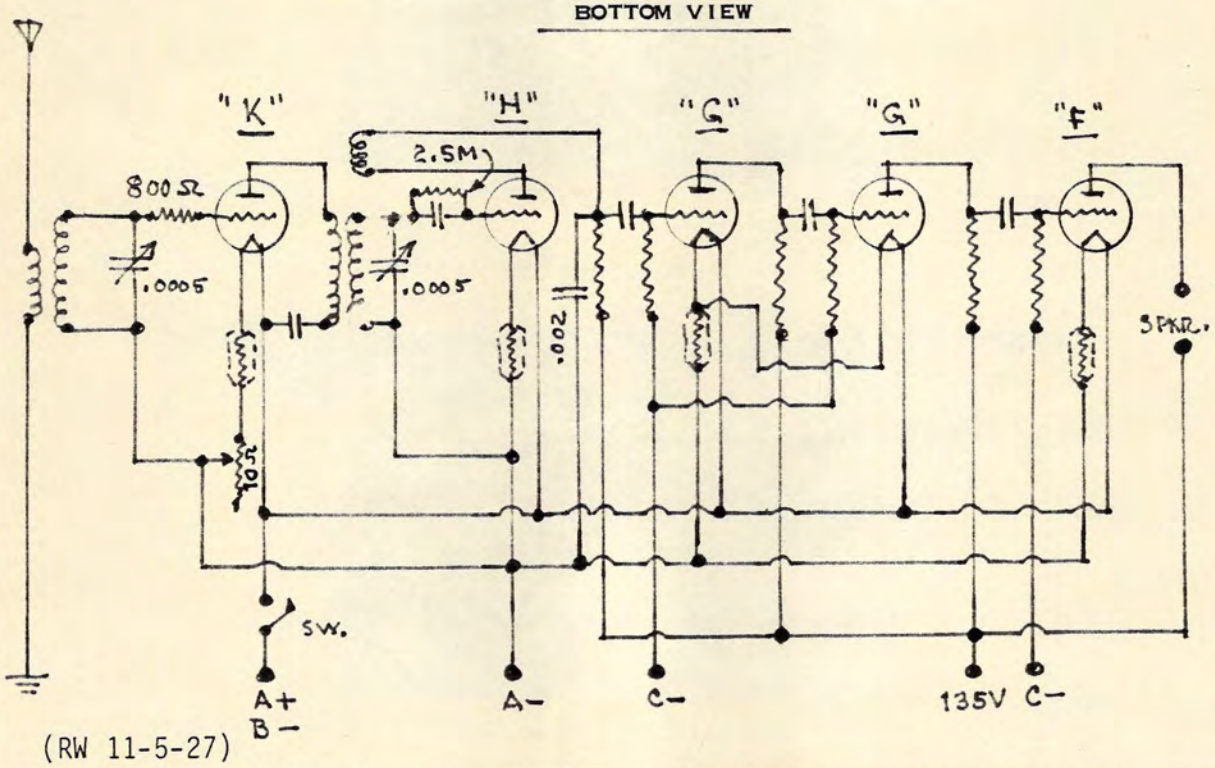

(RW 11-5-27)

LYNCH DECK APPLICATION #2 FOR THE "ARISTOCRAT", 1927

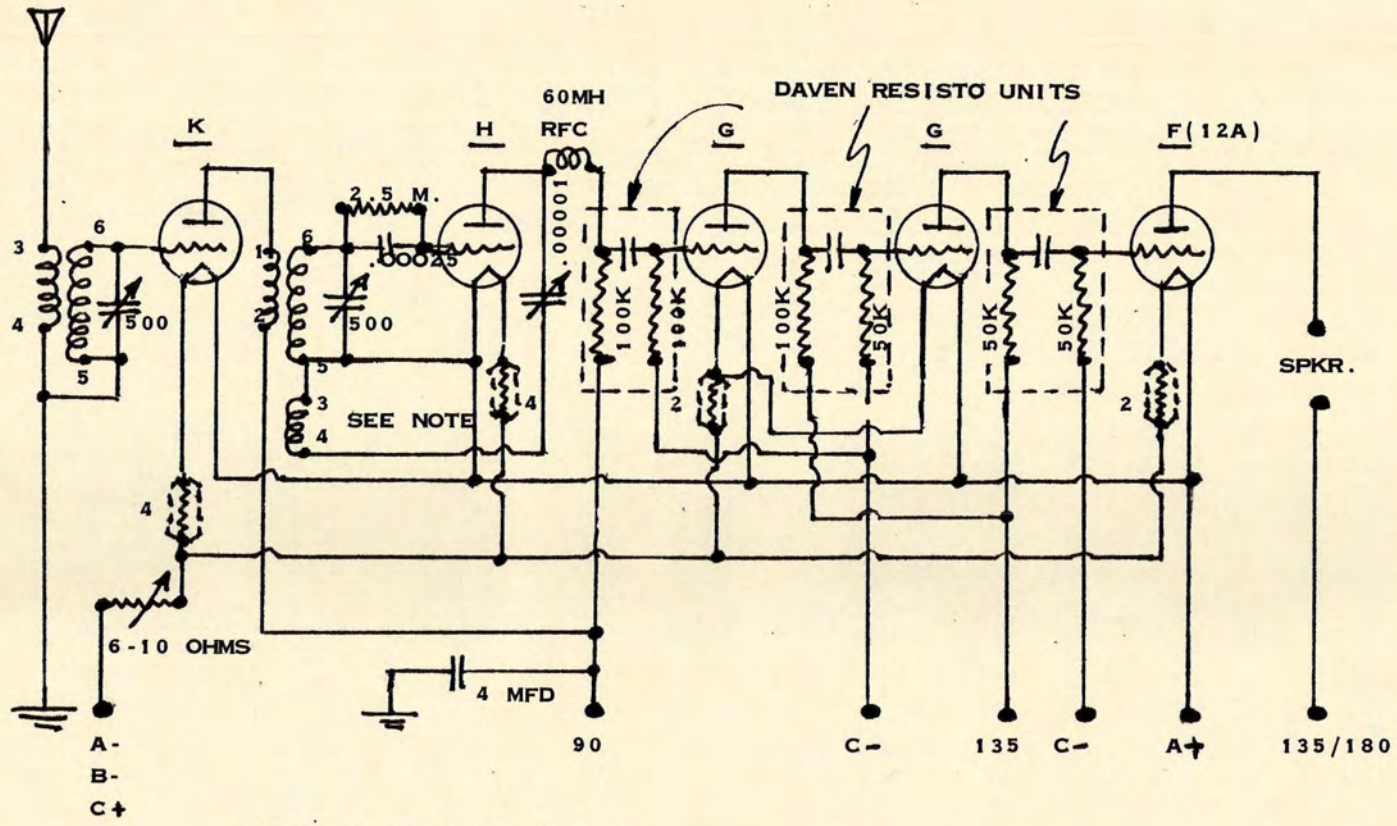

NOTES: 1. AERO COILS U-95.
2. AERO RFC NO. 60.
3. AMSCO 1223 VARIABLES.
4. CE-CO TUBES USED THROUGHOUT.
5. LYNCH EQUALIZERS (AMPERITES WILL DO).

IF REGENERATION FAILS, REVERSE CONNECTIONS 3 AND 4.

(RW 2-4-28)

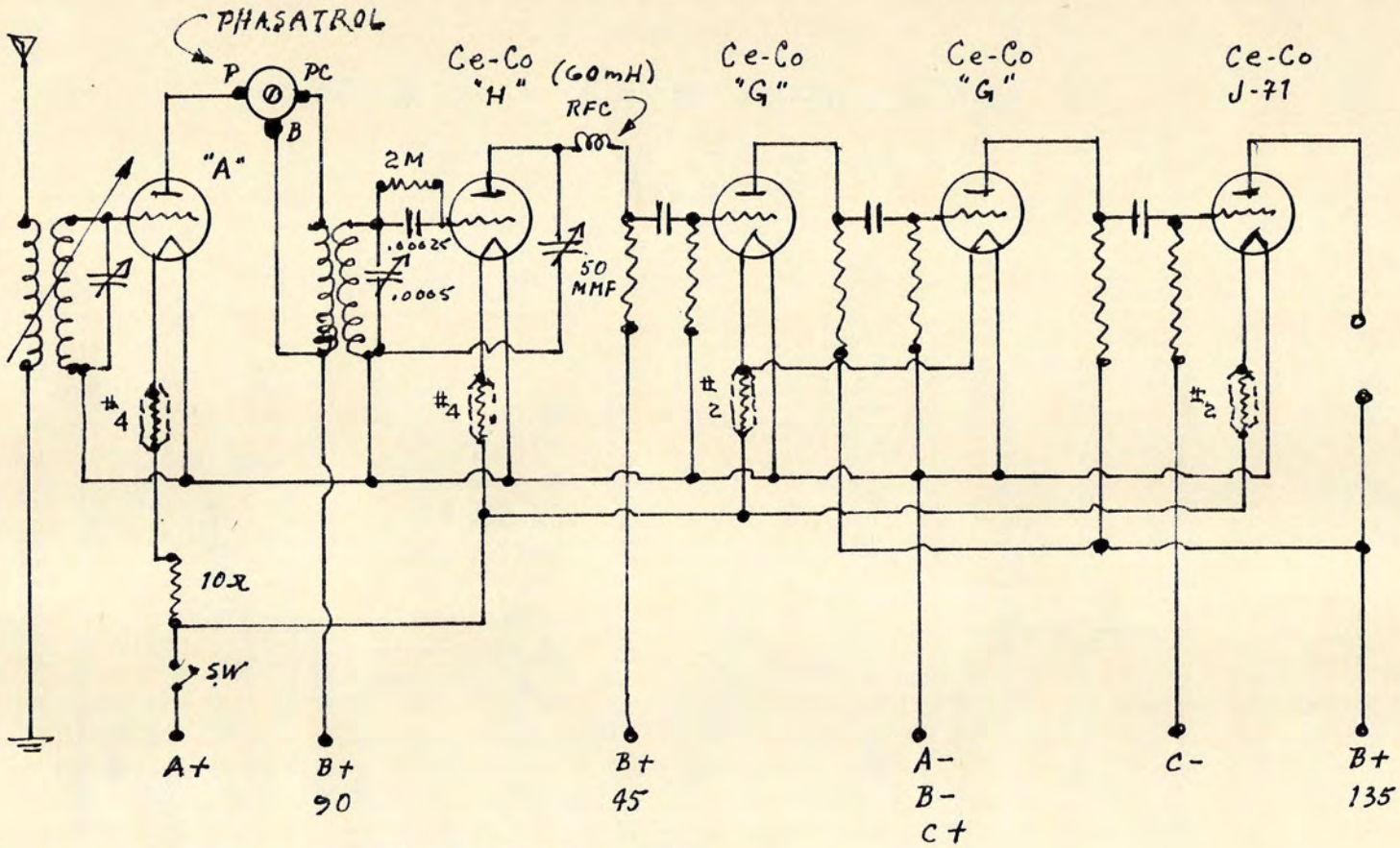

GEN. RADIO VARIOCOUPLER.
(2) " " .0005MFD VARIABLES.
" " RF XFRMR.
LYNCH "Equalizers", 2 EA. #2, #4 (AMPERITES or ELKAY JUST AS GOOD.)
SEE SKETCH of LYNCH DECK FOR VALUES NOT SHOWN.
PANEL = 7"x18"
(2) NAT'L. "Velvet Vernier" DIALS.

LYNCH DECK APPLICATION #3

LYNCH DECK APPLICATION w/ AERO COILS

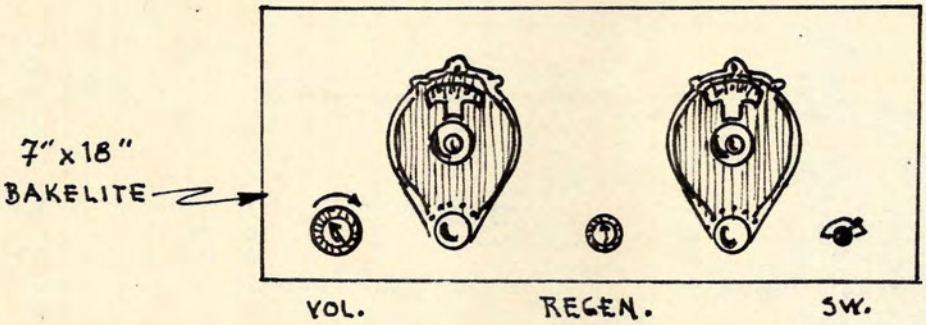

(Also known as LYNCH-AERO-5)

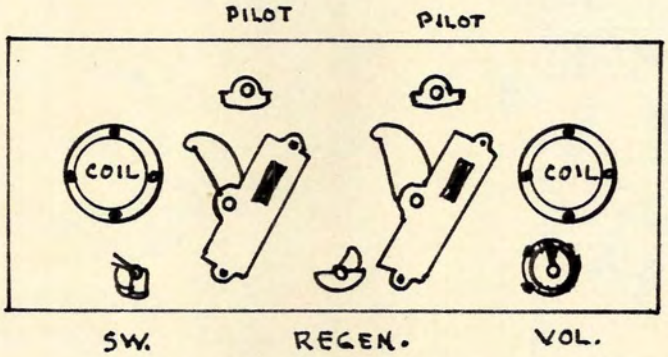

RERE of PANEL

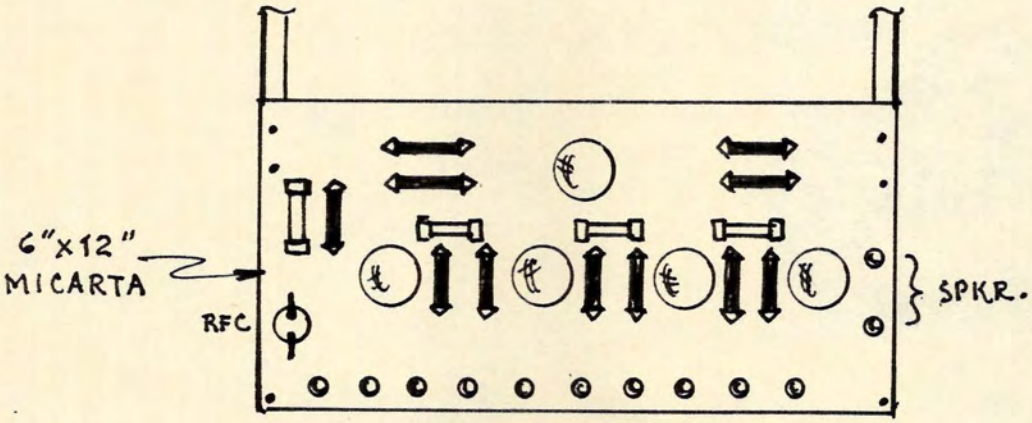

DECK #2 LAYOUT

LYNCH NATIONAL FIVE, 1927

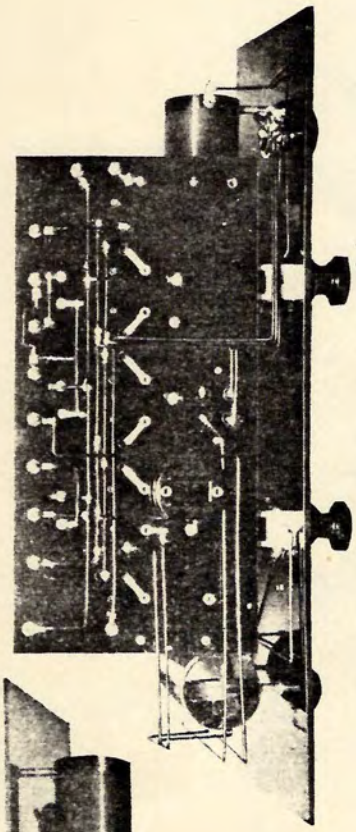

BOTTOM VIEW

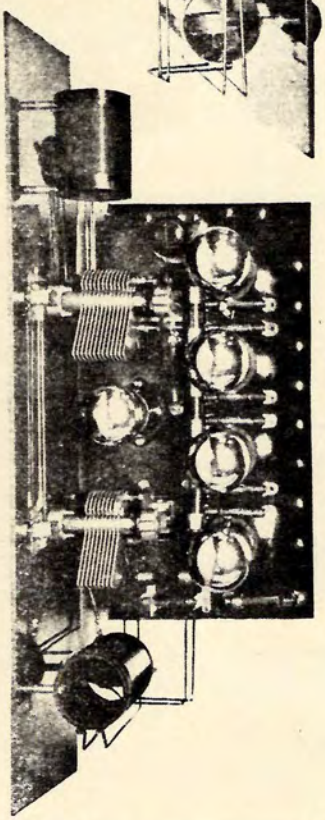

PLAN VIEW

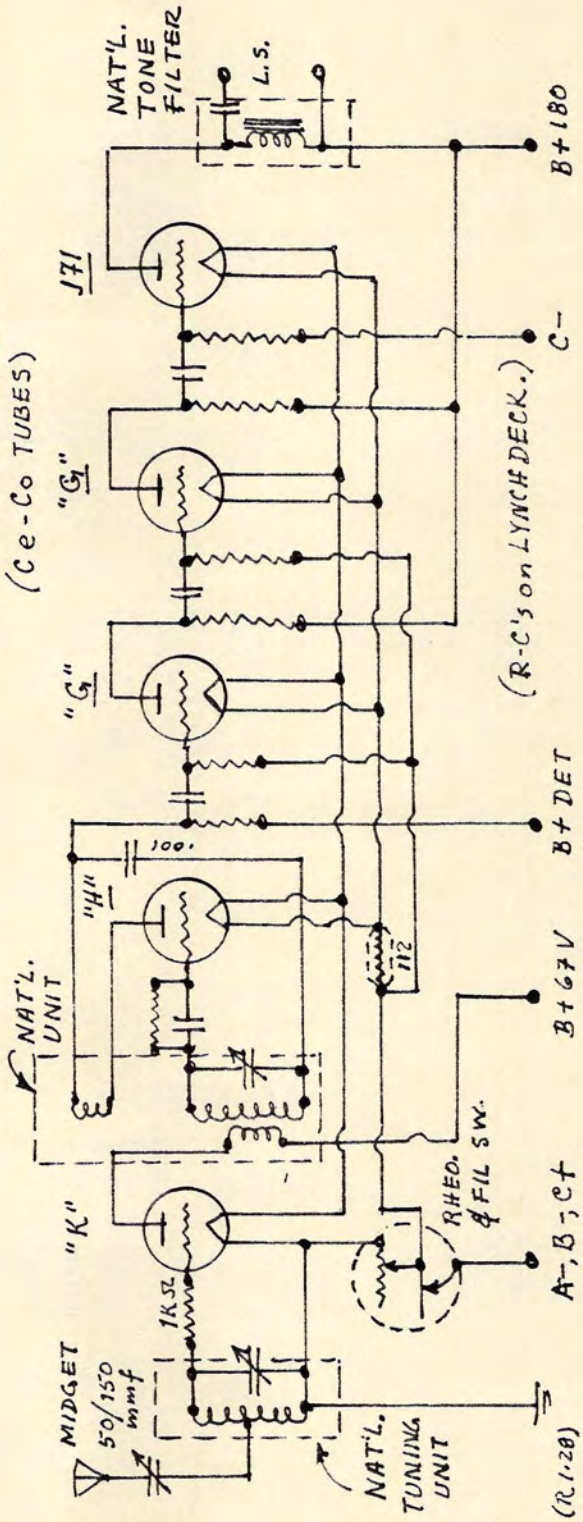

LYNCH "UNIVERSAL" RECEIVER, 1926

This receiver was designed by Lynch, with the help of Sleeper and others, while he was Editor for RADIO BROADCAST, the McGraw-Hill publication. As with all of his other jobs, Lynch left after two years; but this receiver has something to recommend it. It was neatly laid-out, used top-drawer components, and performed quite well. The circuitry was conventional, and you should have no trouble in figuring it out.

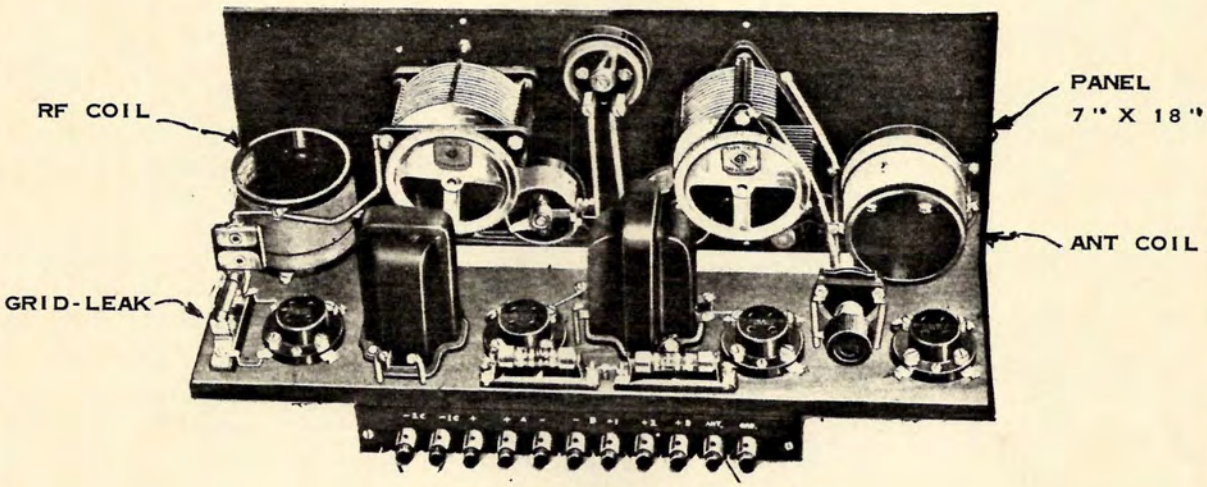

PRINCIPLE PARTS

GEN-RAD Variables, 500 mmf each (2).

GEN-RAD AF Transformers, #285. (2)

GEN-RAD RF Plug-In Coil.

GEN-RAD ANT Coil.

X-L Push-Posts (11).

AMPERITES 1-A (2).

BENJAMIN Sockets (4).

CHELTON Midget Variable *ANT Trimmer).

LYNCH "UNIVERSAL" RCVR.,1926;Sht.2

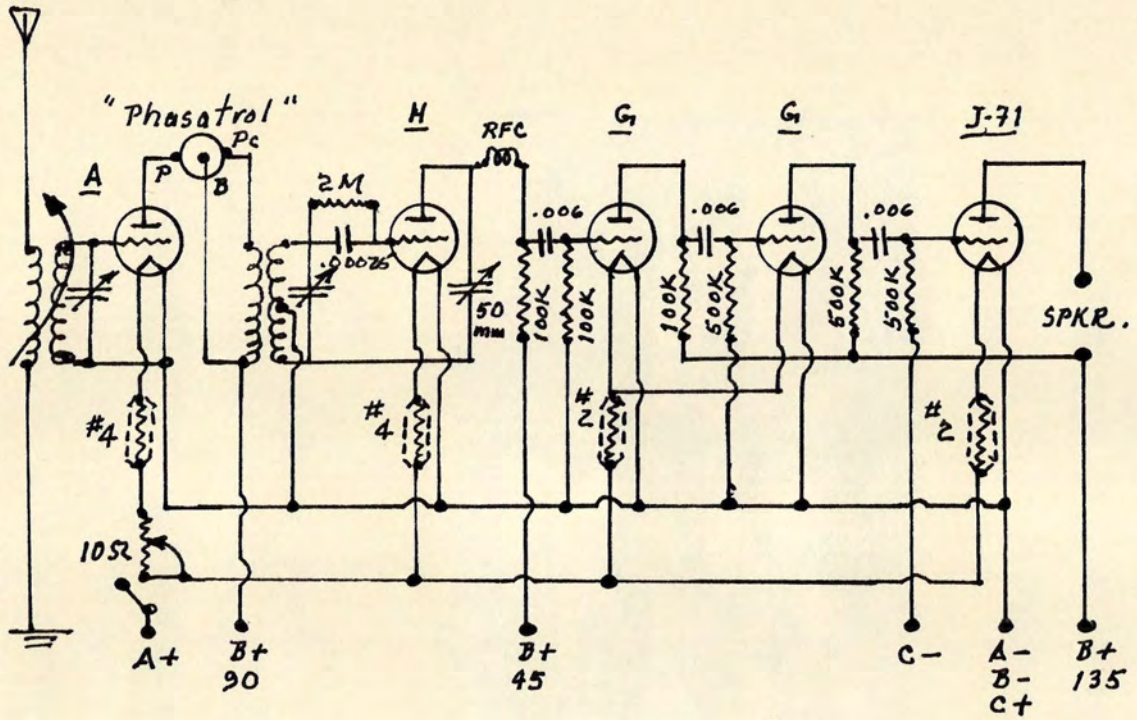

Tube numbers are Ce-Co tube designations.

A filter should be used with the 71 tube.

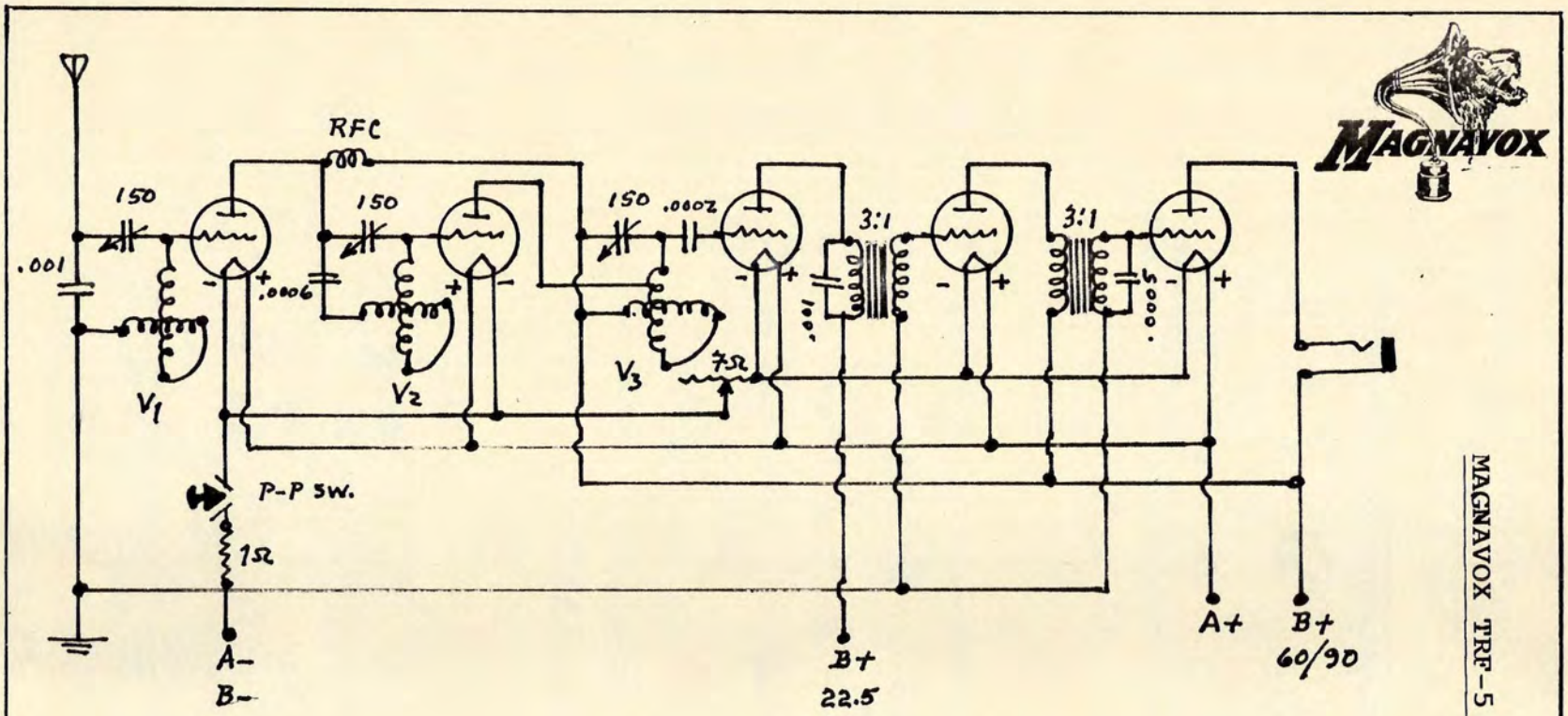

MAGNAVOX TRF-5 & TRF-50, 1923

NOTES: 1. The (3) 150mmf variables are controlled by (3) little white porcelain knobs, called "Ratio Condensers".
2. A conventional grid-leak and condenser may be used.
3. RFC = 300T, No. 30 DCC, wound on a 2"Ø tube.
4. V2 Variometer tapt at 12T; V3 tapt at 7T.

TRF-5
$125.00

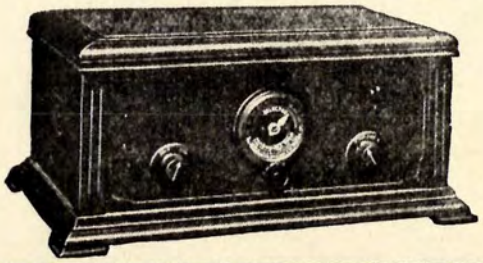

TRF-50
$150.00

(1001)

MADISON-MOORE SUPER-HETERODYNE; 1926
200 to 600 Meters — Sht. 1

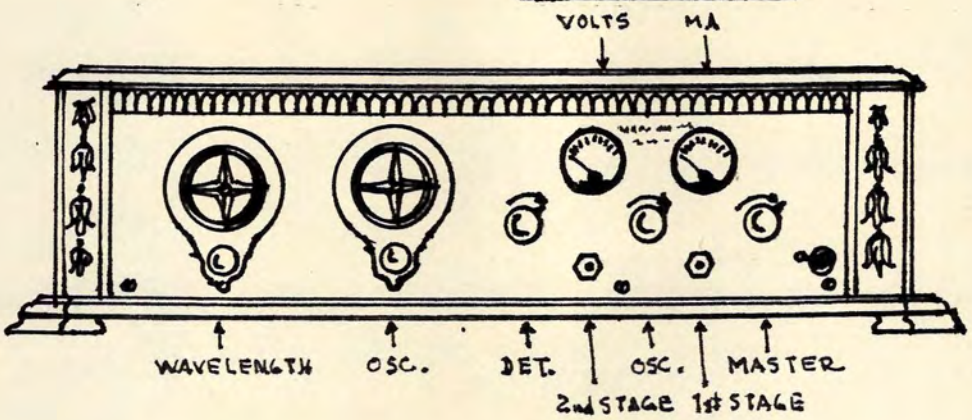

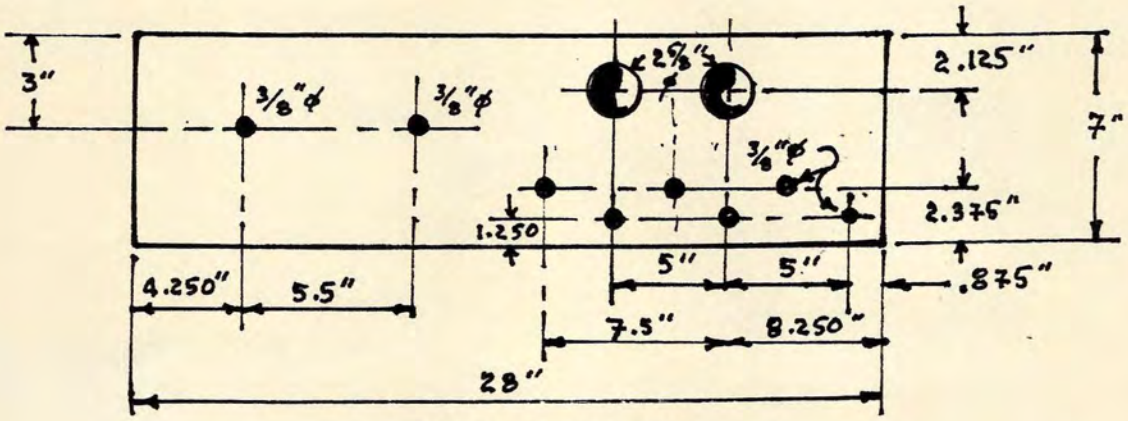

PANEL LAYOUT

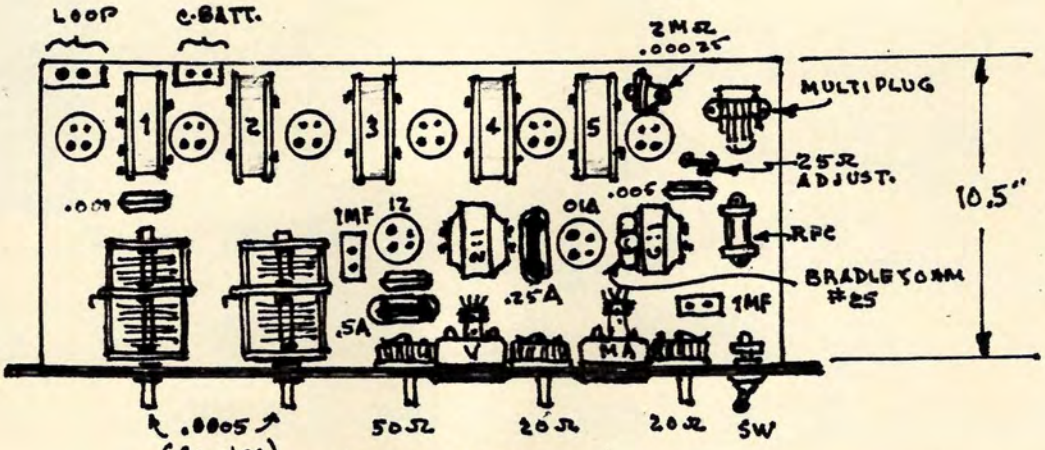

PLAN VIEW

MADISON-MOORE SUPER-HETERODYNE, 1926;Sht.2

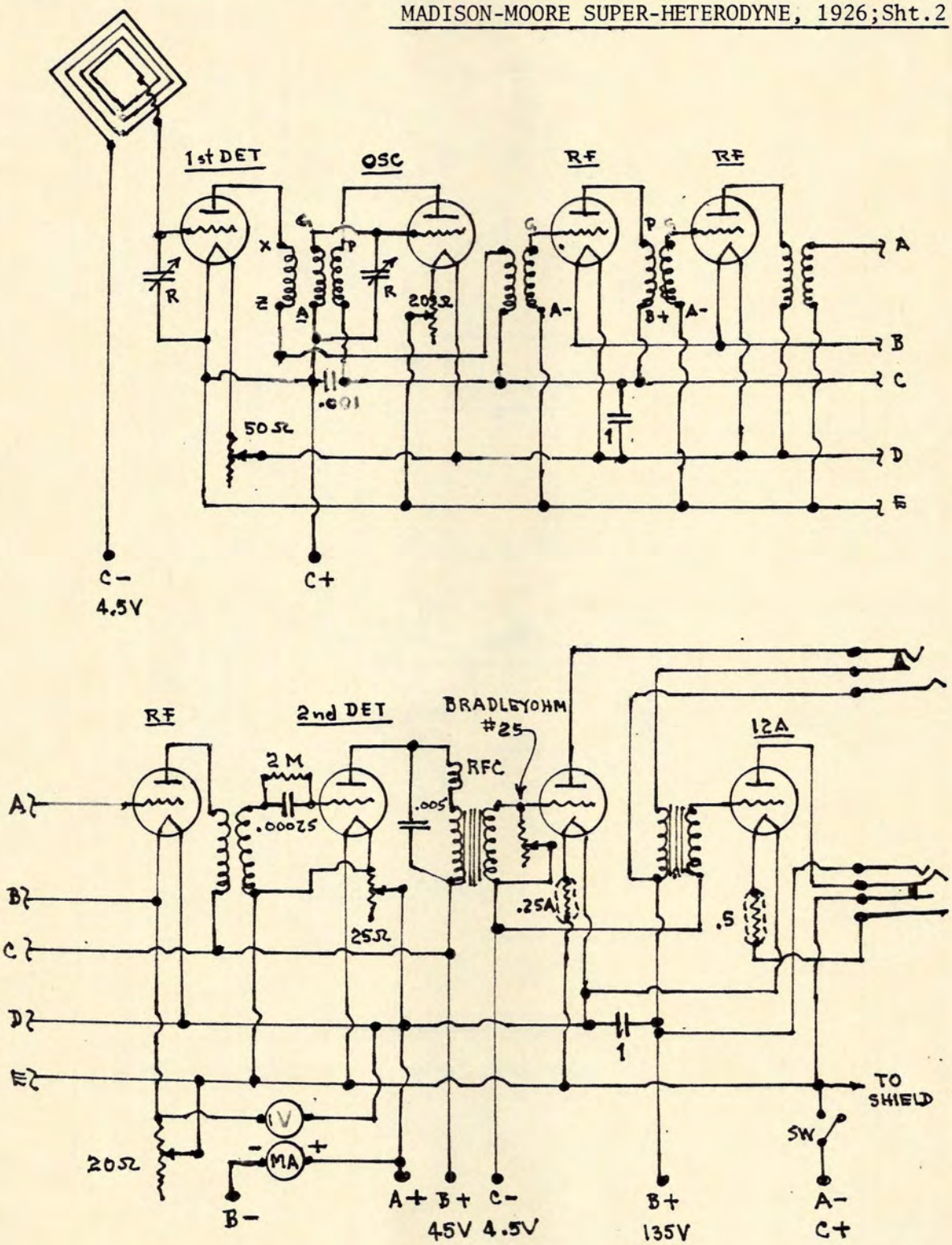

MADISON-MOORE SUPER-HET RECEIVER:Sht. 3

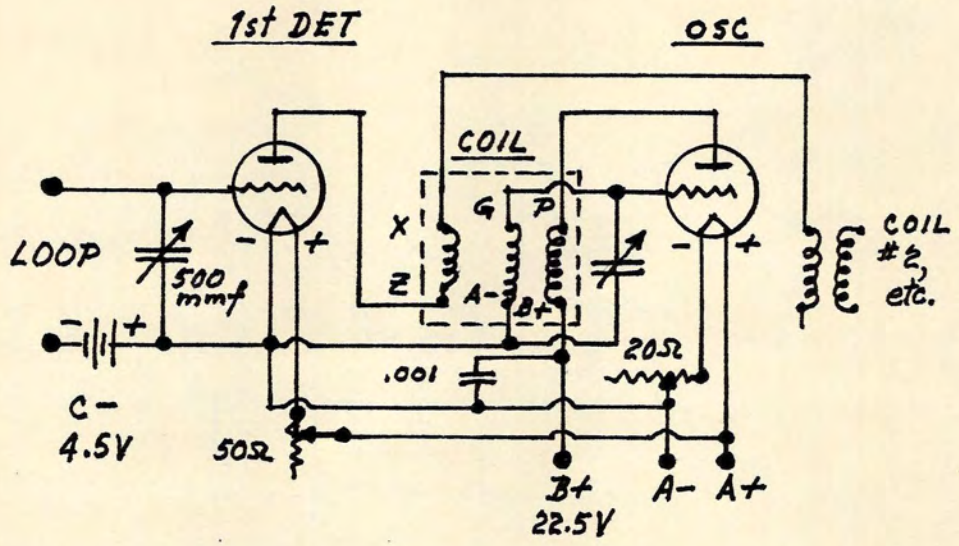

OSCILLATOR CIRCUITRY SIMPLIFIED

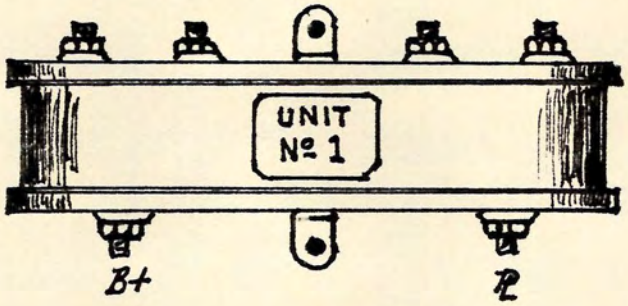

PLAN VIEW

NOTES FOR SHEET 1

1. All panel holes 13/32", unless noted.
2. Loop and Speaker Strip = 2½" x .75" x .186".
3. C-Battery Strip = 2¼" x .75" x .186.
4. M-M name was in gold Gothic script.

(CB Spr.-26)

MADISON-MOORE SUPER-HETERODYNE, 1926:Sht.4

PRINCIPLE PARTS

GEN-RAD AF Transformers #285,

GEN-RAD Variable Condensers, 500 mmf.

WESTON Type 301 Voltmeter - 0-8VDC.

WESTON Ammeter Type 301, 0-50 mA.

SAMSON RFC #51, 85 mH.

PACENT "Microvern" Metal Dials.

BRADLEYOHM #25.

NOTE

To tune lower than 200 meters, remove the connecting wire from the two variable condensers. This will result in a capacity of 250 mmf.

* * *
* *
*

MADISON-MOORE " ONE-SPOT" RECEIVER
(1926) (Sht. 1)

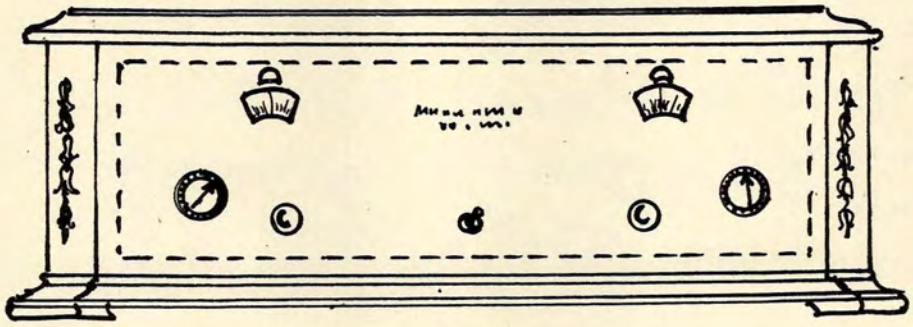

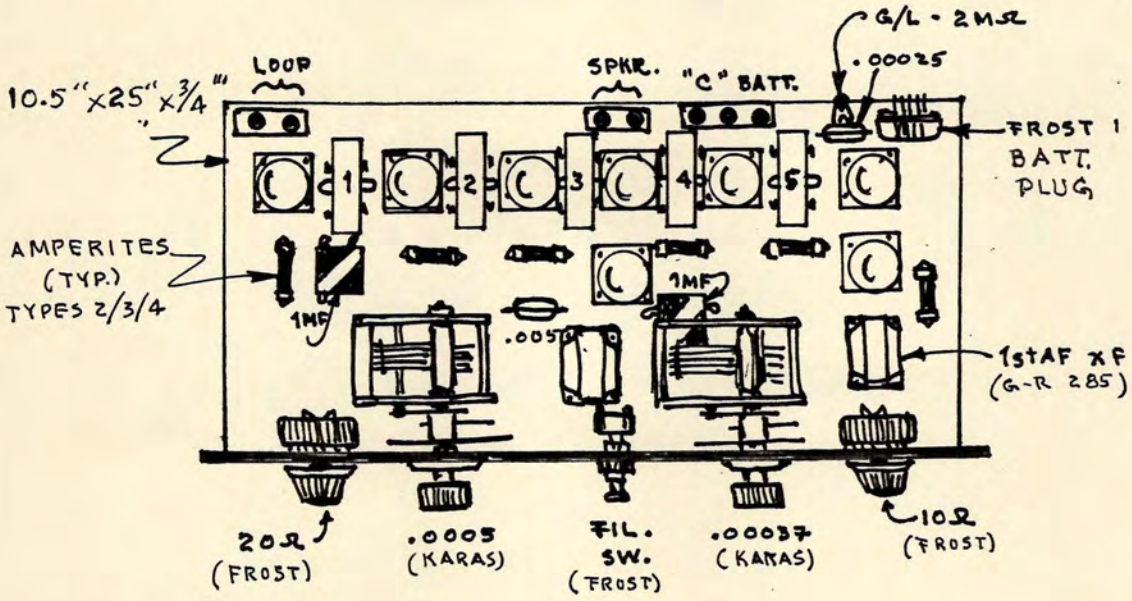

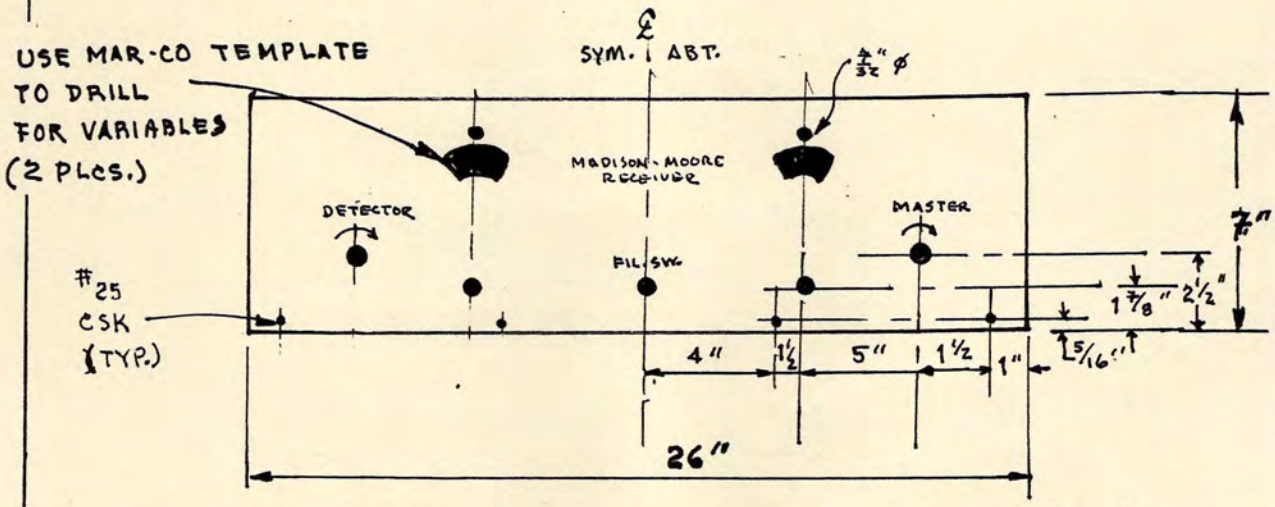

MADISON-MOORE "ONE-SPOT" RECEIVER, 1926;Sht.2

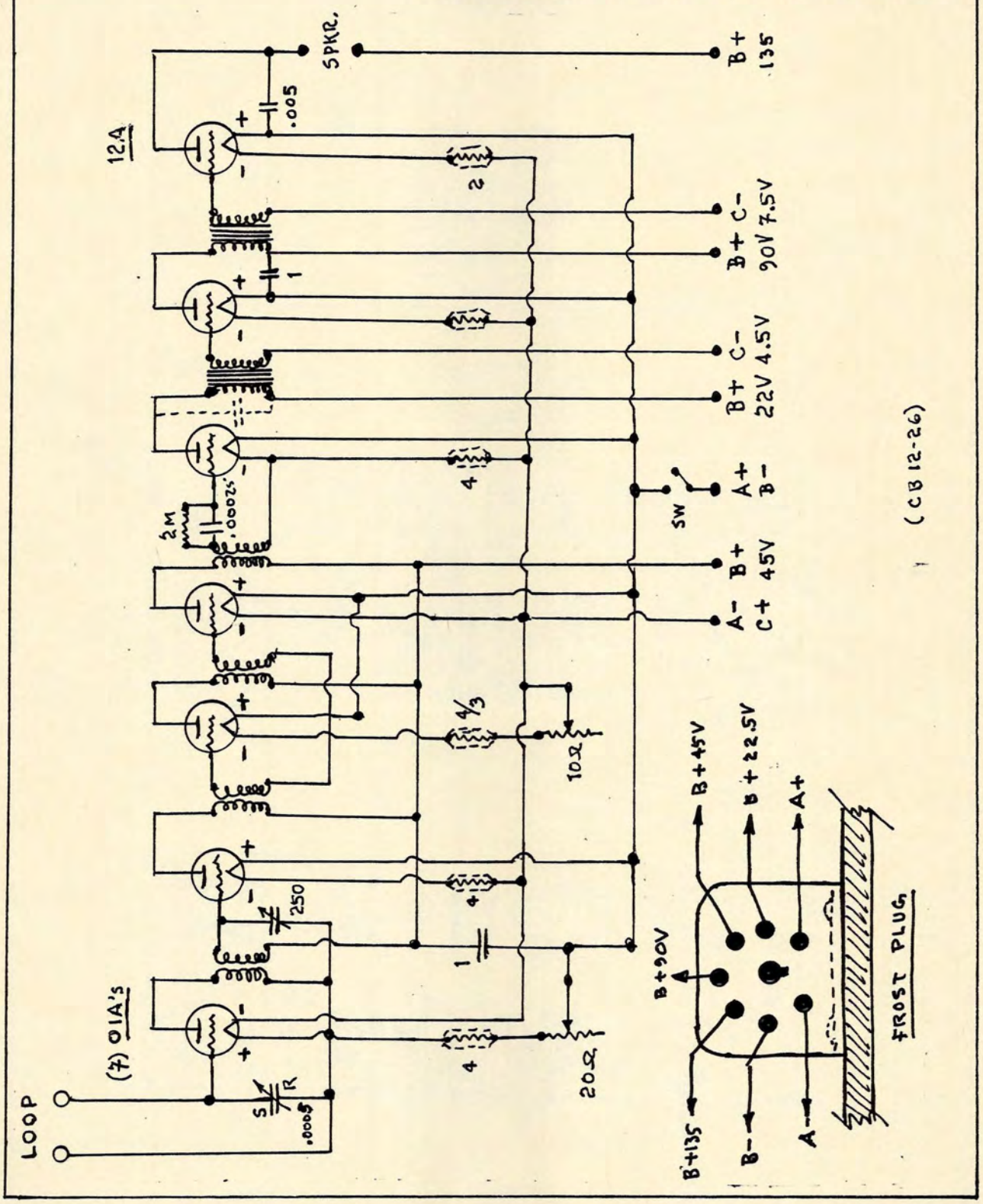

MADISON-MOORE "INTERNATIONAL ONE-SPOT", 1927:Sht. 1

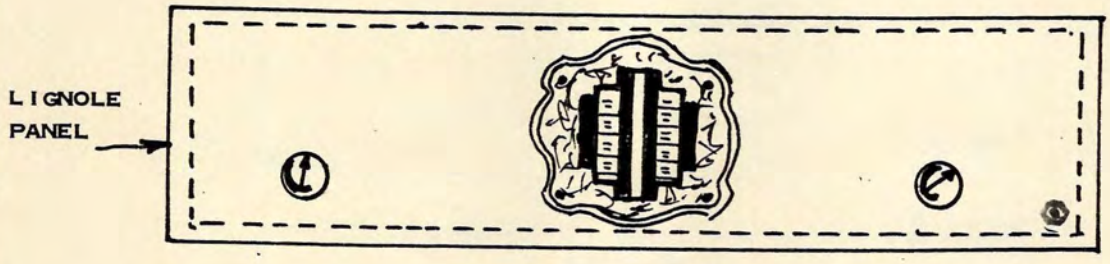

1927 PANEL

1927 LAYOUT

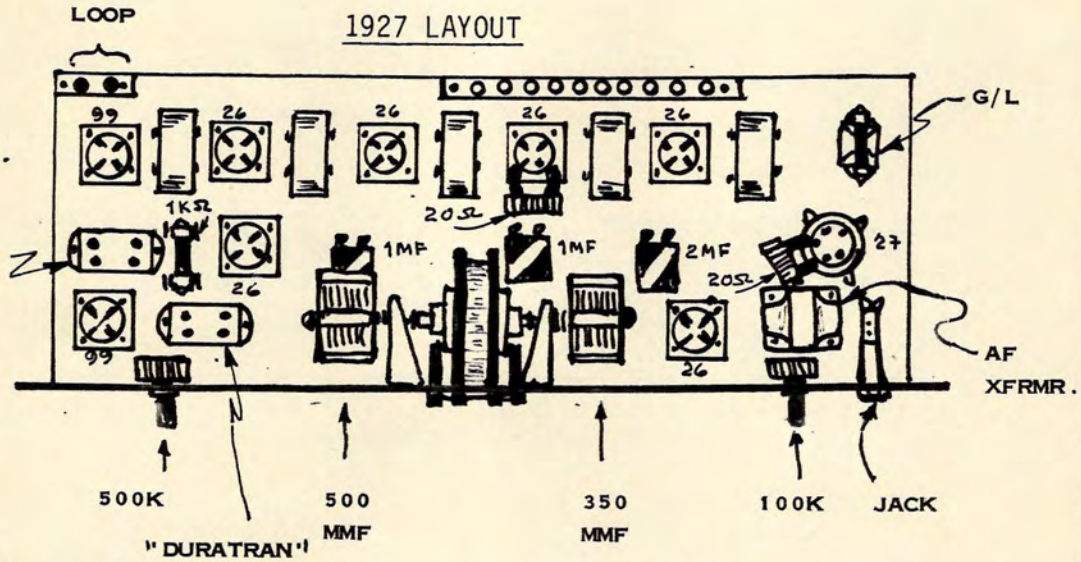

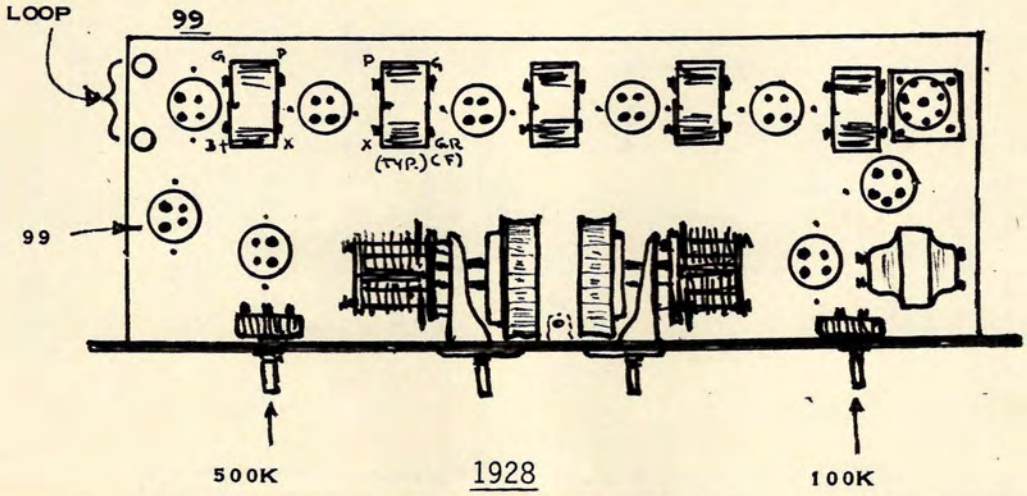

1928

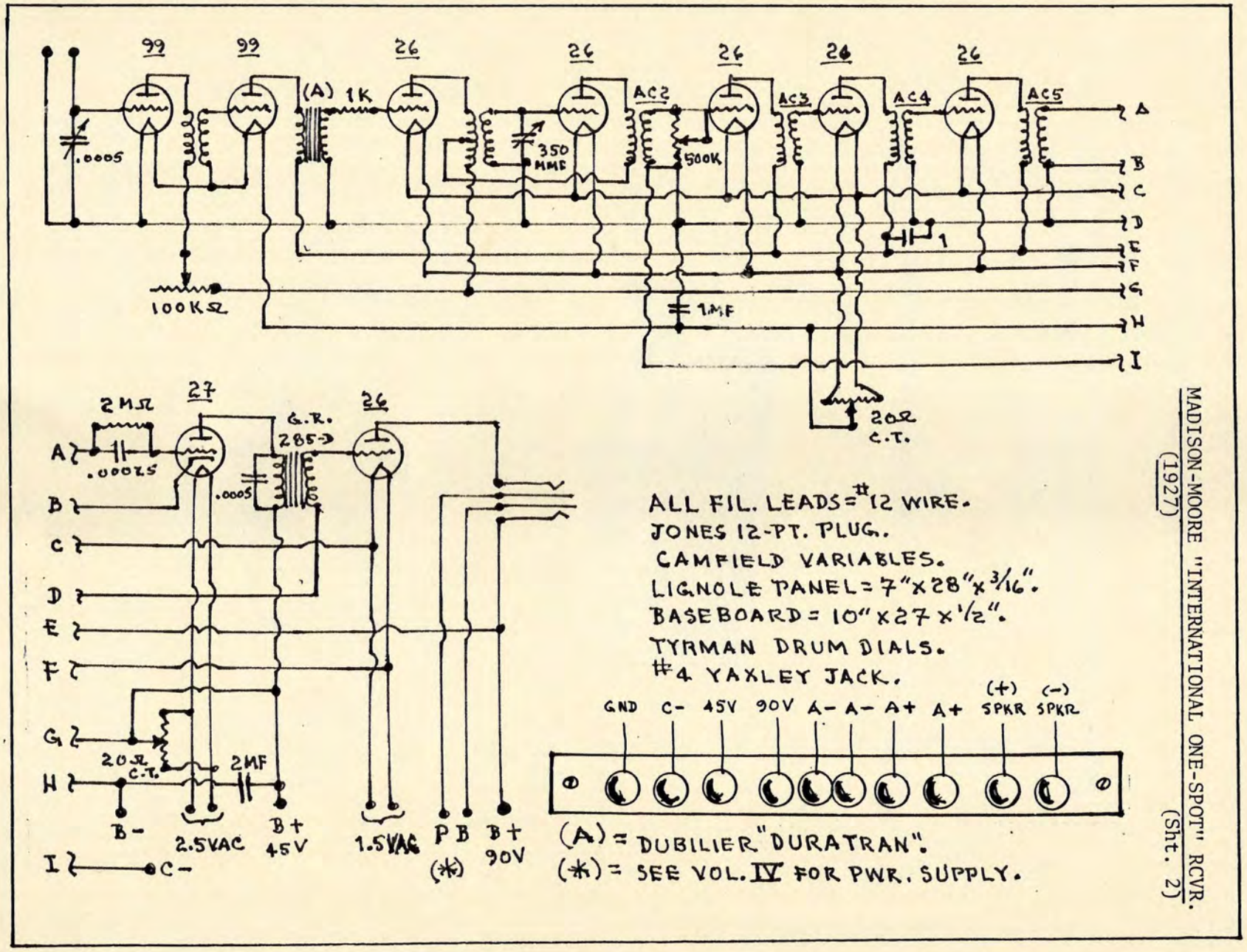

MADISON-MOORE "INTERNATIONAL ONE-SPOT" RCVR. (1927) (Sht. 2)

MAGNAFORMER 8-9 RECEIVER
(1927 Version) (Sht. 1)

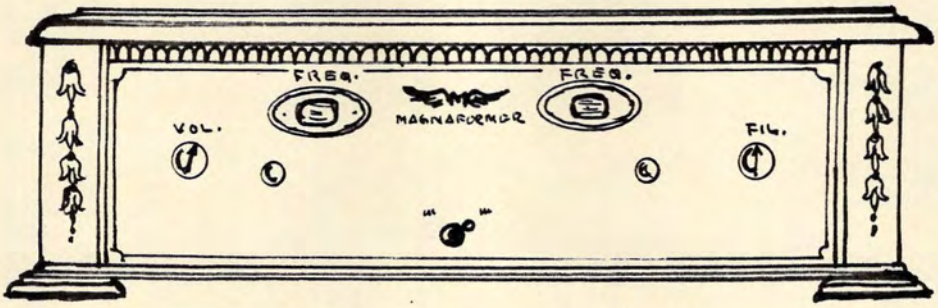

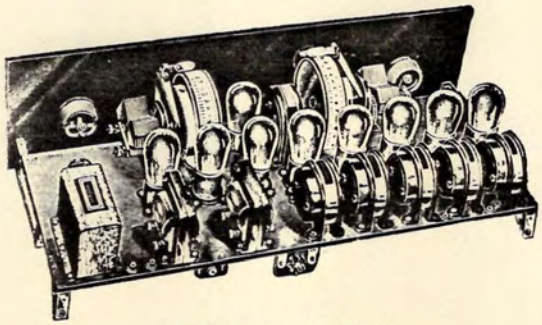

REAR VIEW

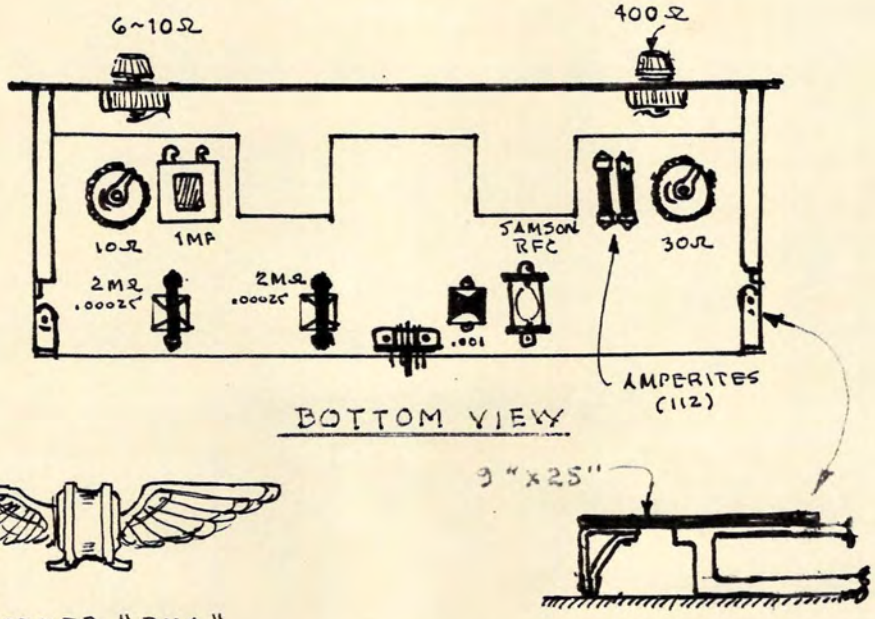

BOTTOM VIEW

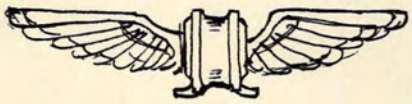

MAGNAFORMER "BUG"

MAGNAFORMER 8-9 RECEIVER
1927 Version
Sht. 2

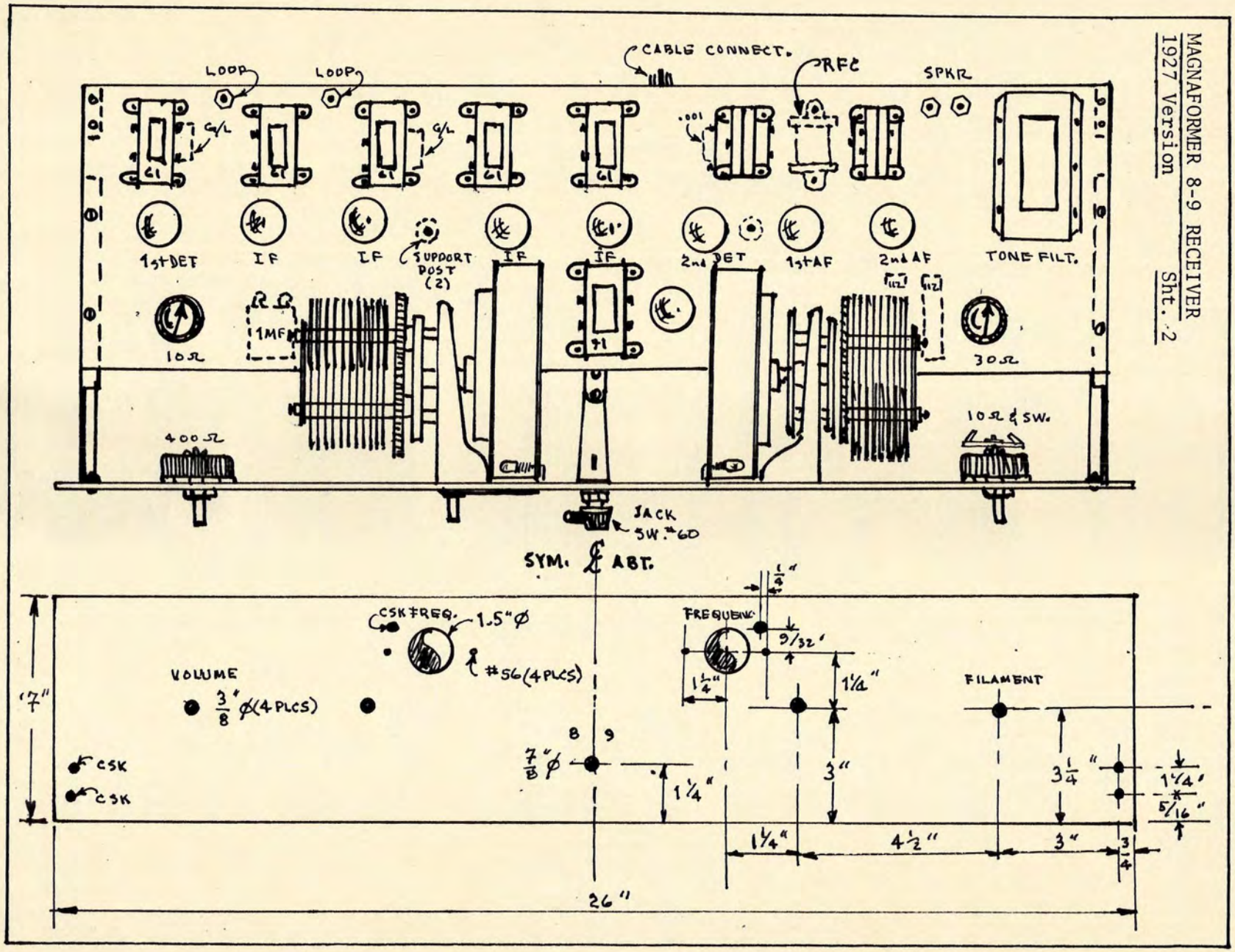

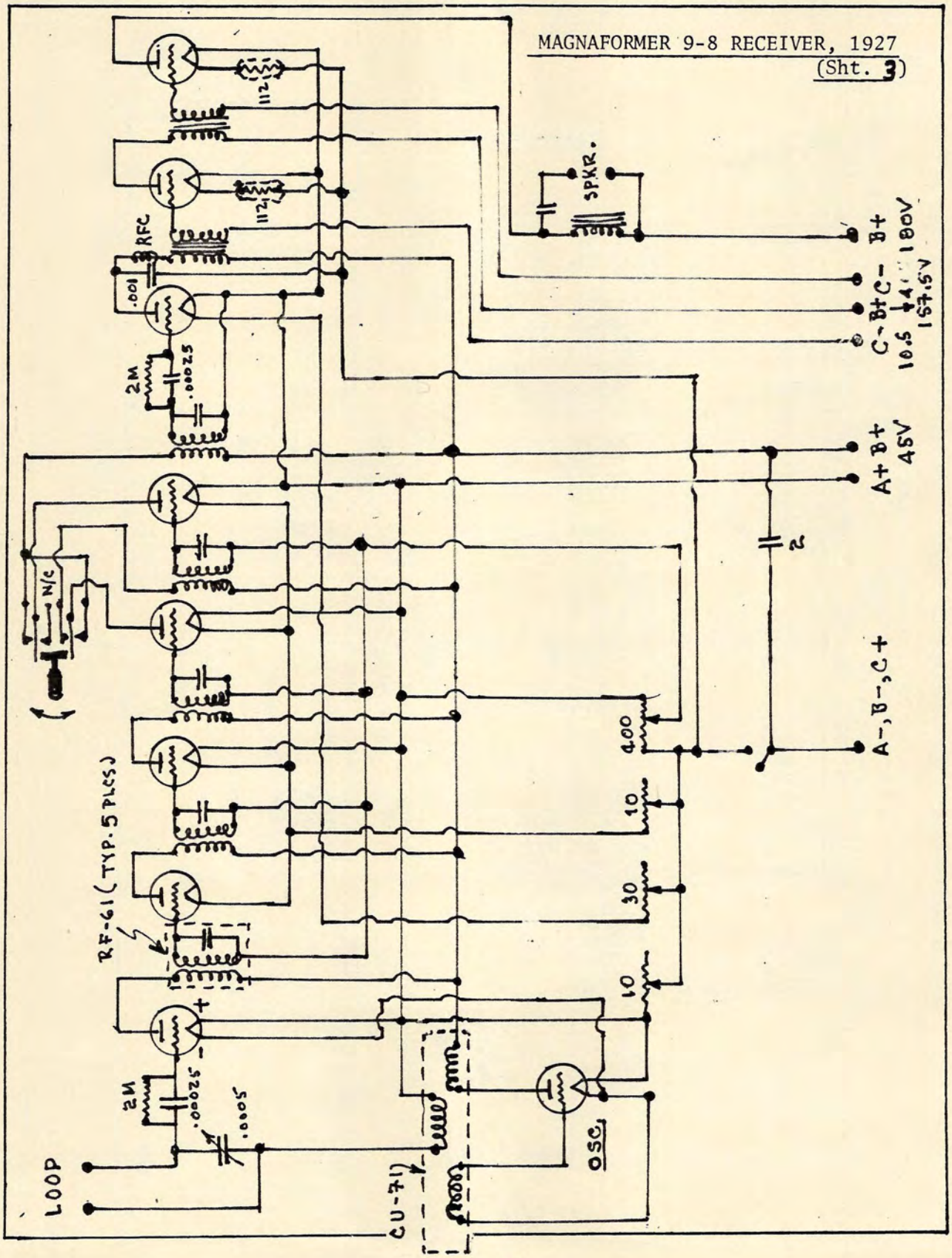
MAGNAFORMER 9-8 RECEIVER, 1927
(Sht. 3)
SPKR.
112
112
RFC
.001
2M
.00025
N/C
RF-61 (TYP. 5 PLCS.)
2M
.00025
.0005
LOOP
CU-711
OSC.
400
10
30
10
2
A+ B+
45V
C- B+ C-
B+
A-, B-, C+

MAGNAFORMER 9-8 RECEIVER, 1927
(Sht. 4)

Sealing Disc (8)

Fixed Variable (4)

(6) Metal Shield Enclosure

(1) Bakelite Spool

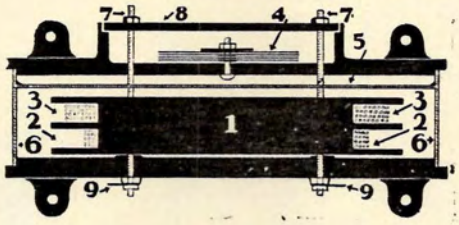

SEC Metal Shield (5)

SEC (3)

PRI (2)

TYPICAL MAGNAFORMER

Soldering Lugs (9)

Each coil is exactly the same - i.e., 69.73 KC, or 4,300 meters. Lugs are conventionally marked as F,G,P,B+. All coils carry the same designation, except the "Unicoupler" - which is designated CU-71; all others = RF-61.

NOTES FOR BUILDING

1. (2) Remler drum dials.
2. (2) Remler #639 Variables, .0005 mfd.
3. DPDT switch for cutting AF stage in or out.
4. RFC = 125mH.
5. Yaxley gold-plated jack-switch.
6. (4) tip jacks.
7. 12-ft. Round buss-wire, #14.
8. 25-ft. Flexible hook-up wire.

MAGNAFORMER 8-9 RECEIVER, 1927; Sht. 5
(Variant)

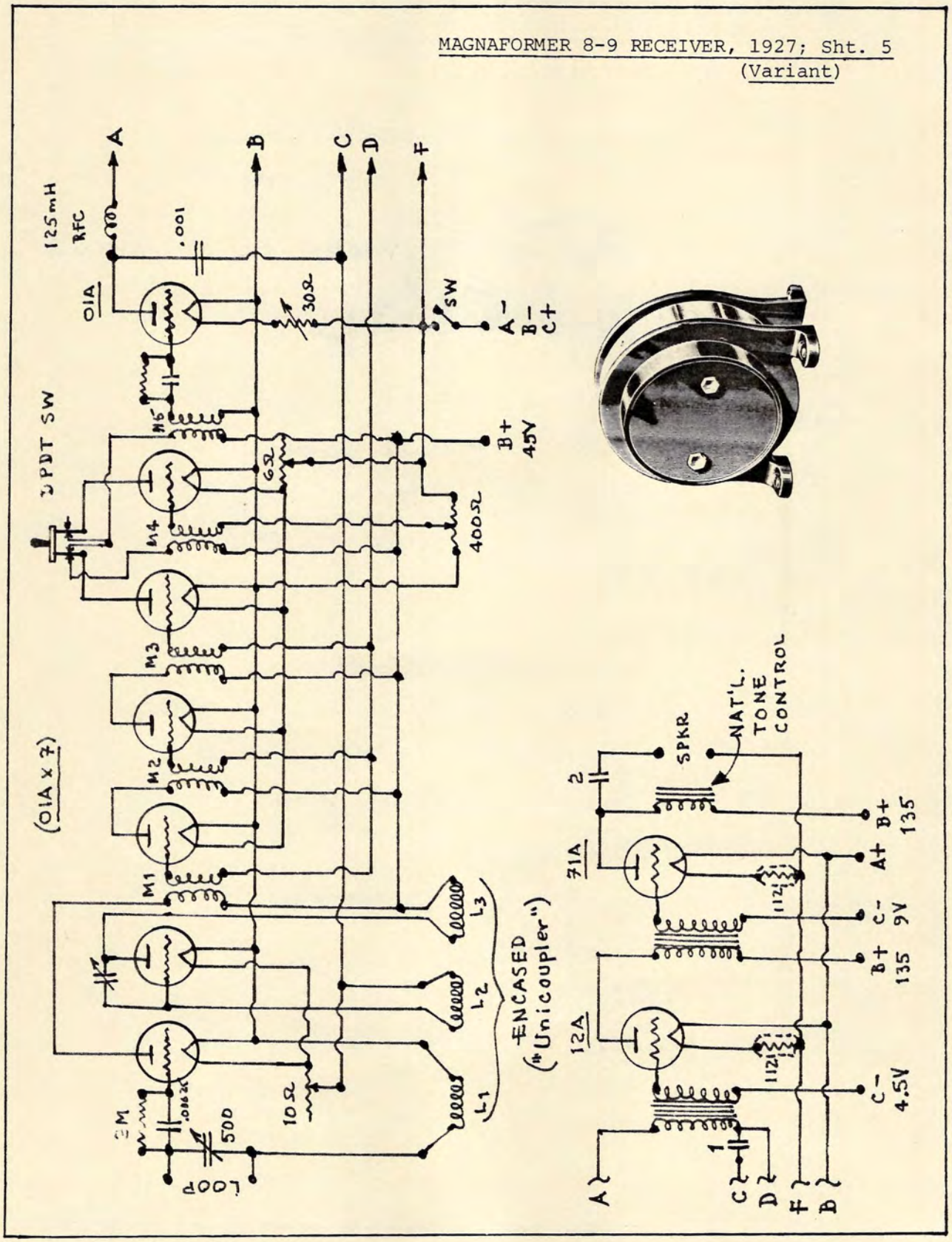

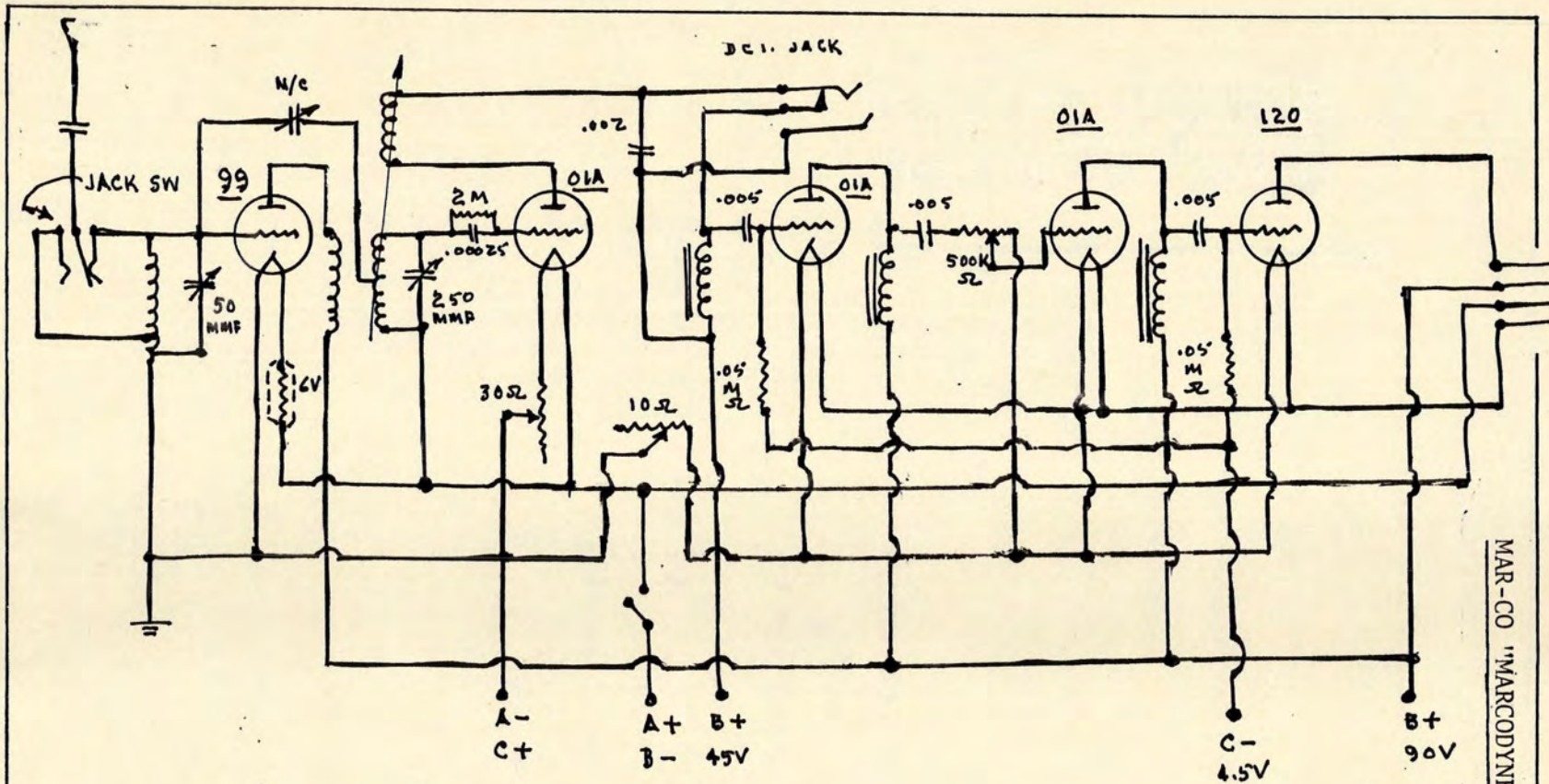

MAR-CO "MARCODYNE" No. 1 T.R.F., 1926 (Sht. 1)

Panel = 7" x 24".
(3) AF Impedance Chokes.
MAR-CO Dials & Variables.
N/C = neutralizing condenser.

(CB 26)(Kit-$25)

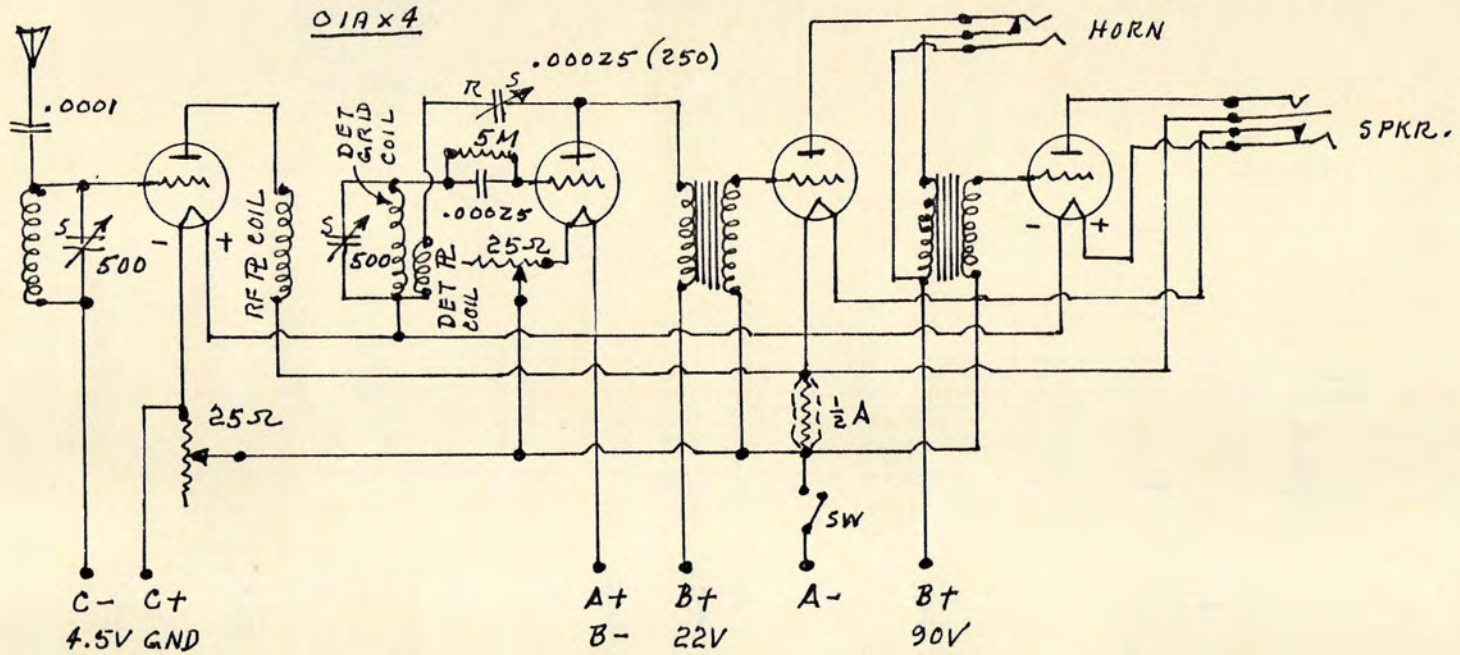

NOTES:
1. The 250 mmf variable is the main OSC control.
2. Vary knob until a whictle is heard, then trim OSC.
3. If whistle persists, turn down RF rheostat.
4. Panel = 7" x 24" x 3/16"
5. (2) Rauland R-500 AF transformers
6. Frost #656 25-ohm rheostats.
7. Frost #608 Battery switch.
8. Sub-panel = 8.5" x 23" x ½".

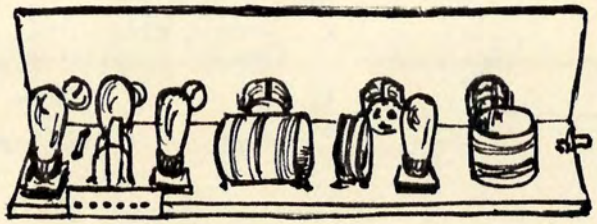

MAR-CO No. 2 T.R.F. RECEIVER, 1926 (Sht.2)

(1926) MAR-CO No. 2 T.R.F. RCVR.;Sht. 3

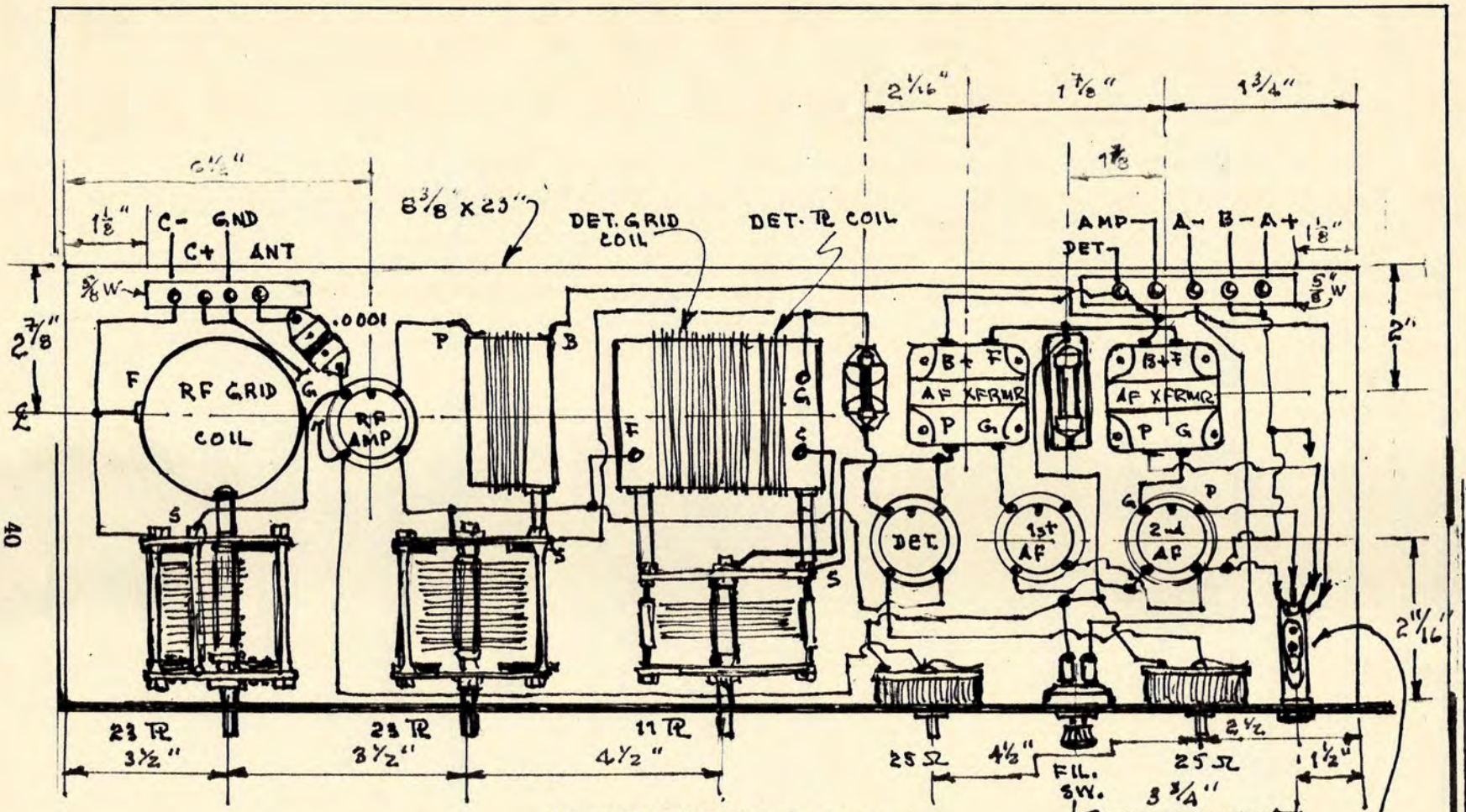

RF tube may be 99 or UV-01A; UX tubes may be used with proper sockets.
Distance between coils is critical, and they should be mounted on baseboard or as shown, as far back as possible.
Increase C-voltage or decrease Plate voltage to enhance stability.

"MARCODYNE No. 3" TRF, 1926; Sht. 1

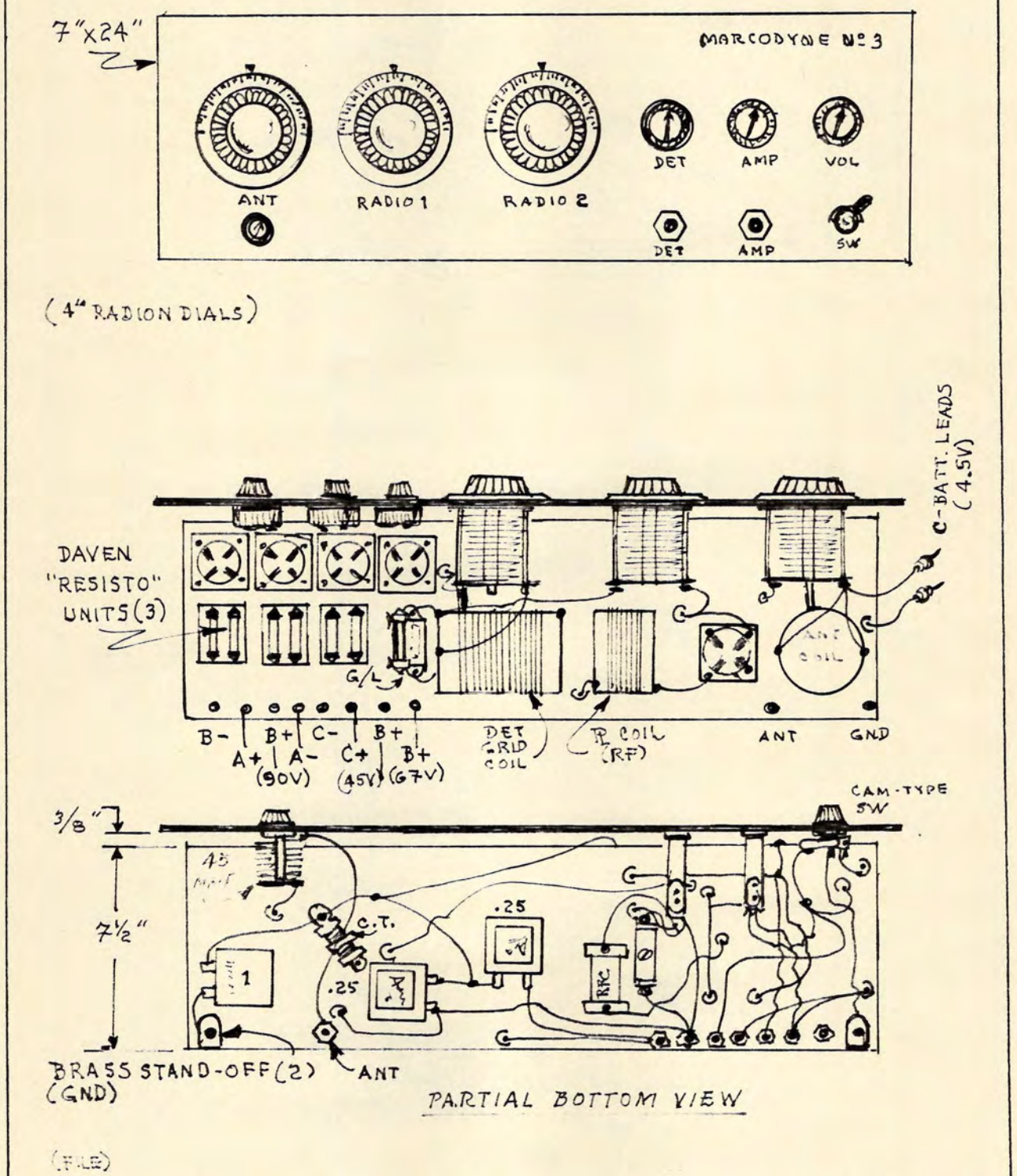

"MARCODYNE No. 3" TRF, 1926: Sht. 2

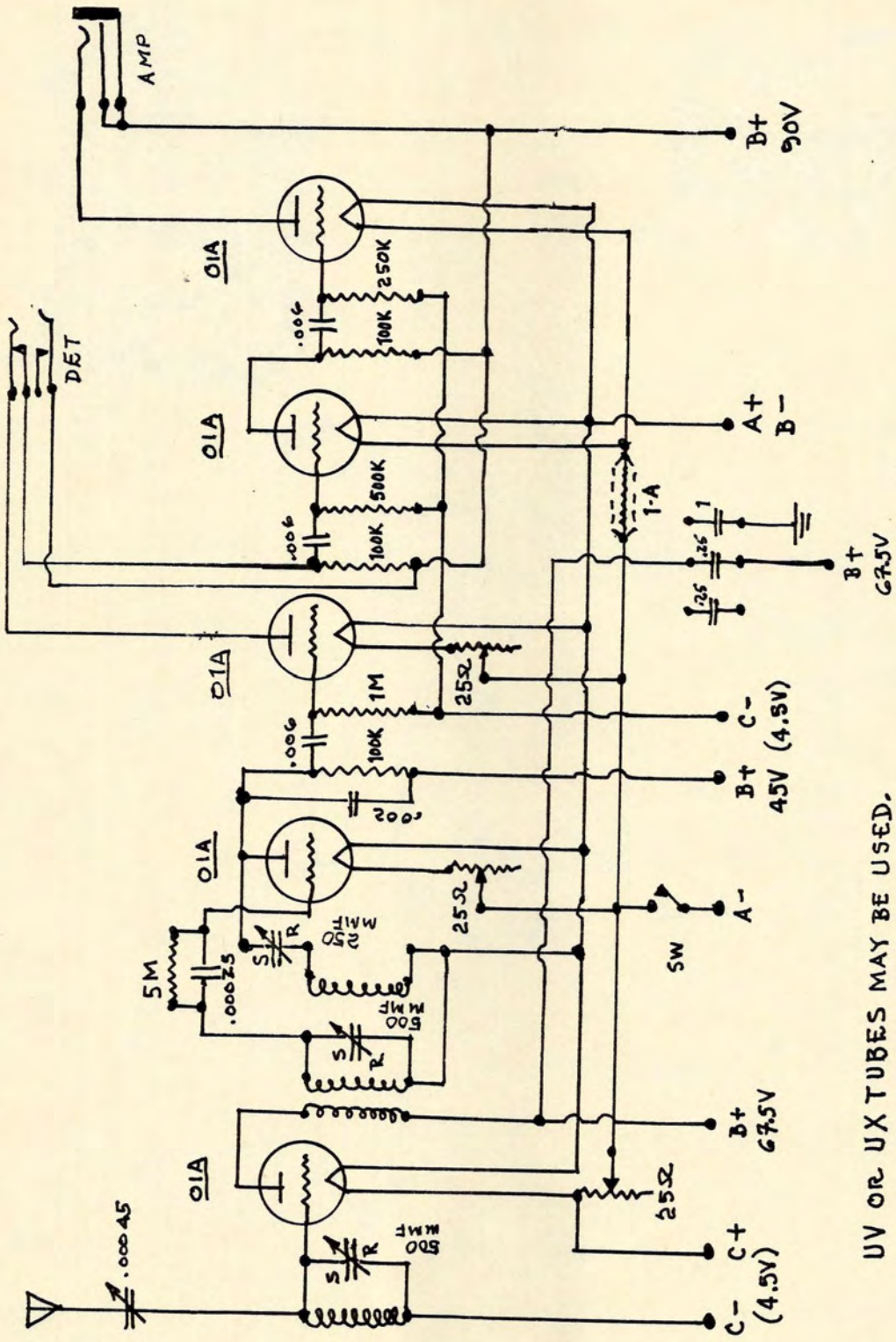

UV OR UX TUBES MAY BE USED.

MAZDA "CONSOMELLO JR."; 1926,$50

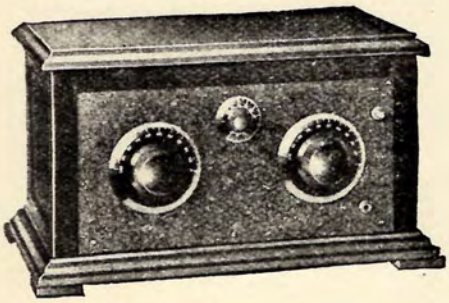

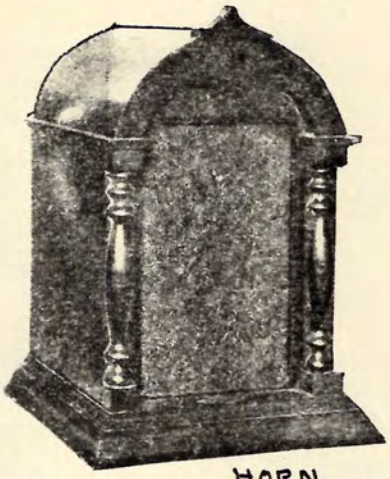

HORN SPKR. '28

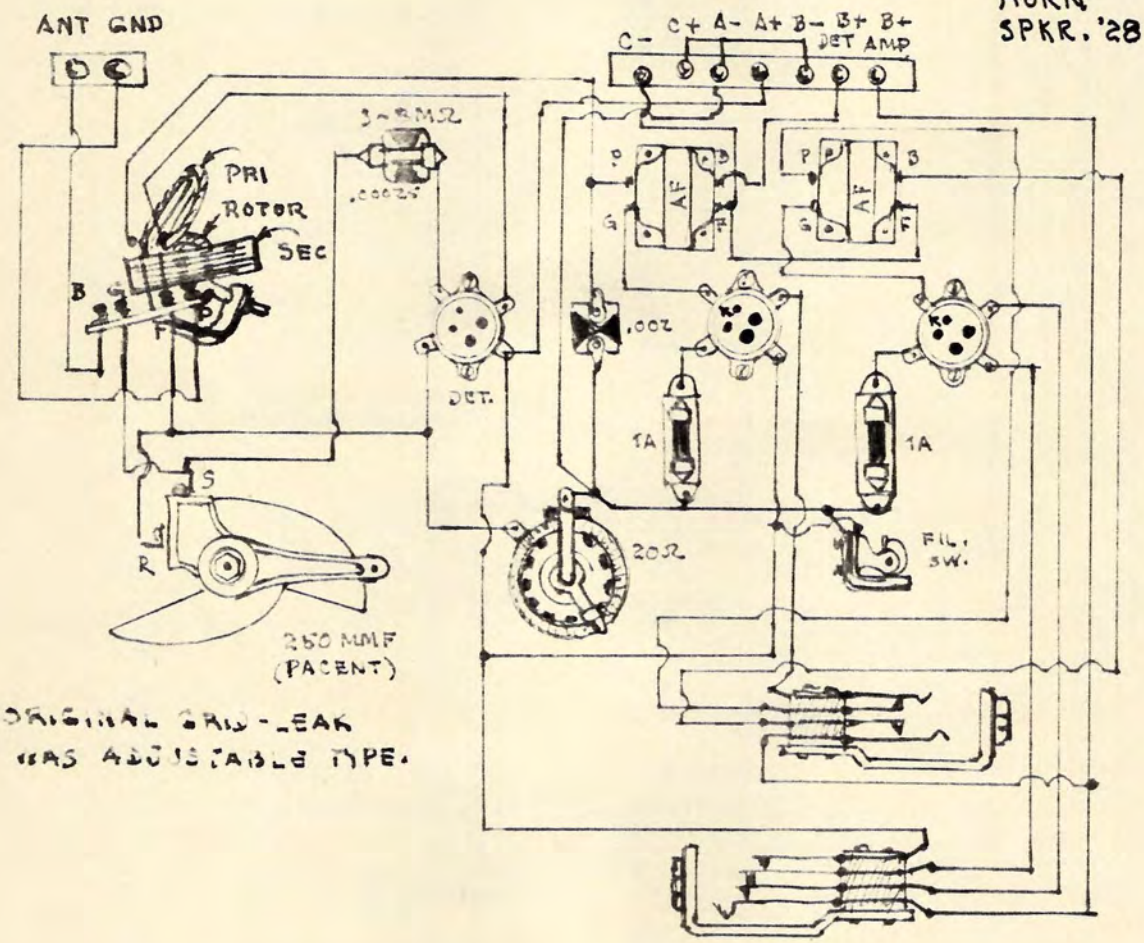

(CIA-Spr.26)

A COMPACT AC-DC TRF MIDGET, 1933

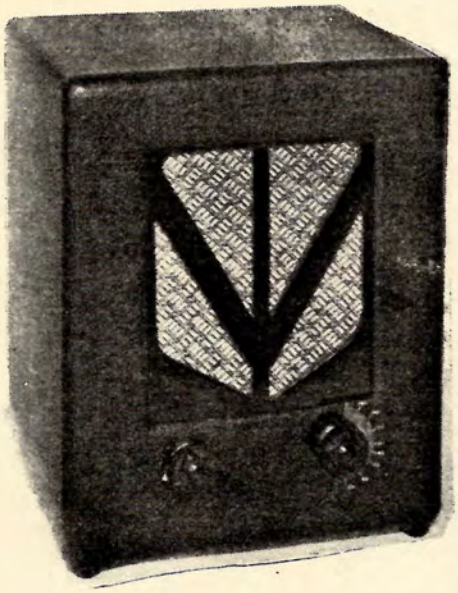

(7½" x 6" x 5½")

NOTES:

1. TRIMMERS NOT SHOWN. ON VARIABLES.
2. ALL PARTS INSULATED FROM CHASSIS.
3. L_1 = SICKLES ANT CPLR.
4. L_2 = SICKLES RF COIL. (Others may be used.)
5. 100V ON TP & SCREEN of THE 78 & 12A7.
6. 10V ON "K" of 12A7.
7. 4V ON 78 "K" @ FULL VOL.

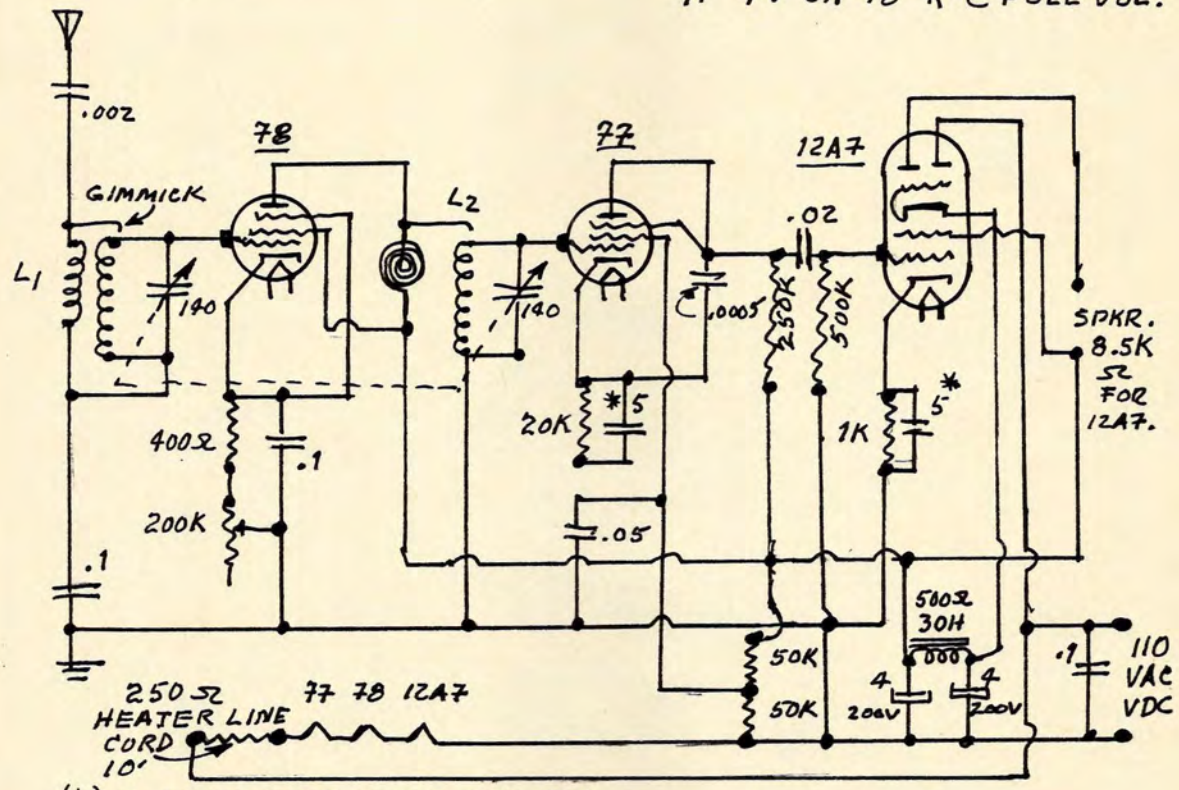

(*) = ELECTROLYTICS, 25 VW.

(RN 5-34)

MUSIC MASTER REFLEXED NEUTRODYNE, 1926

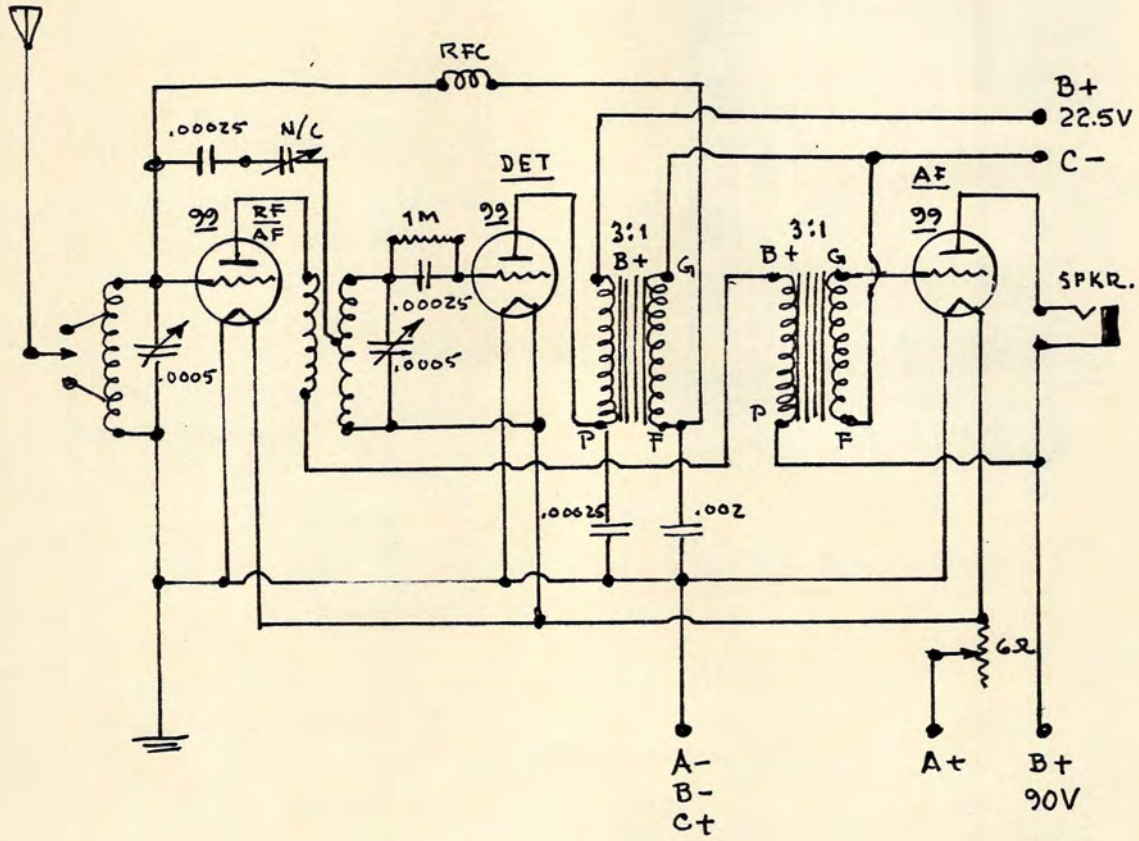

NOTES:

1. MUSIC MASTER had a rather erratic history, although they endured unti the '29 Crash. When they cancelled their early orders from WARE, thereby causing the collapse of WARE (they couldn't maintain production), they never really produced an outstanding set. The main problem was consistent - trouble in the audio sexion. The simplest solution was to replace the AF transformers with reputable makes.

2. A metal panel was used in this set, frequently causing a short between A-, or GND, and the plate circuit, or A+. Check the insulation on the wires.

(R 4-26)

MU-RAD "SUPER SIX" TRF, 1926; Sht.1

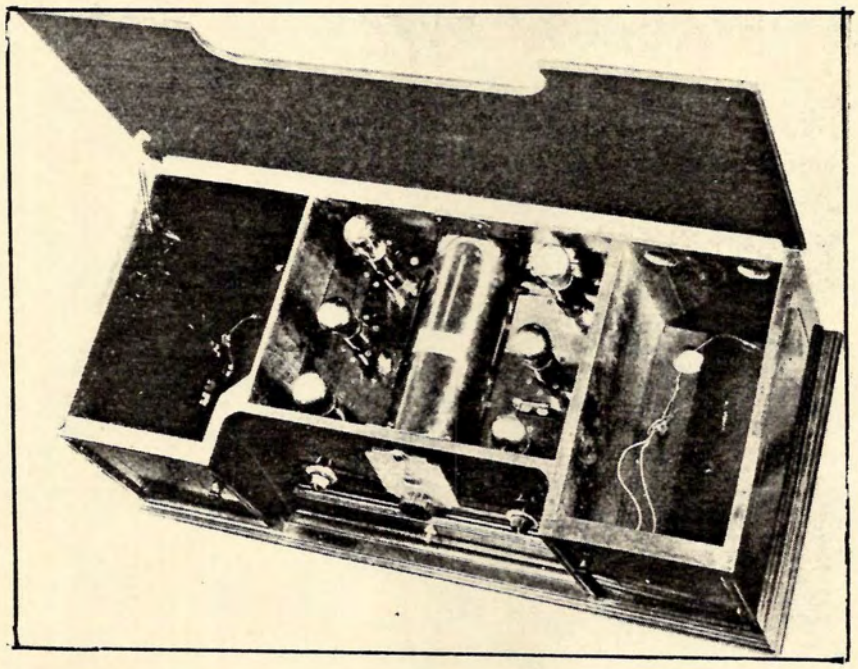

Available with two panel configurations; see Vol. V. The cut above depicts the Model B. Both had 2 stages of RF, DET, and 3 stages of AF. Tube complement was (5) 01As, 12A or 71A. Dial gear ratio 5:1.

MU-RAD "SUPER SIX" TRF, 1926; Sht. 2

MU-RAD MODEL MA-15, 1923; Sht. 1

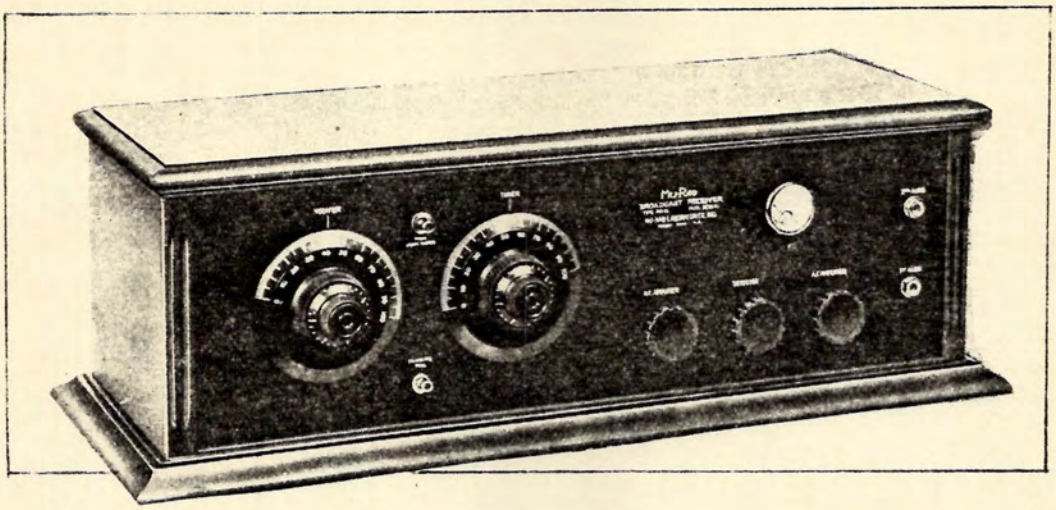

"ONE THOUSAND MILES ON A TWO-FOOT LOOP!!!" (Advert)

NOTES:

1. RF coils were plug-in type.
2. All tubes were 01A.
3. Solid mahogany cabinet.
4. All RF coils were identical; refer to Sheet 2 for coil-winding data
5. P-P switch = Push-To-Test; indicates B+ voltage on the meter.
6. Vernier dials and an engraved panel.
7. Refer to Sheet 2 for schematic.

MU-RAD MODEL MA-15 T.R.F., 1923;Sht. 2

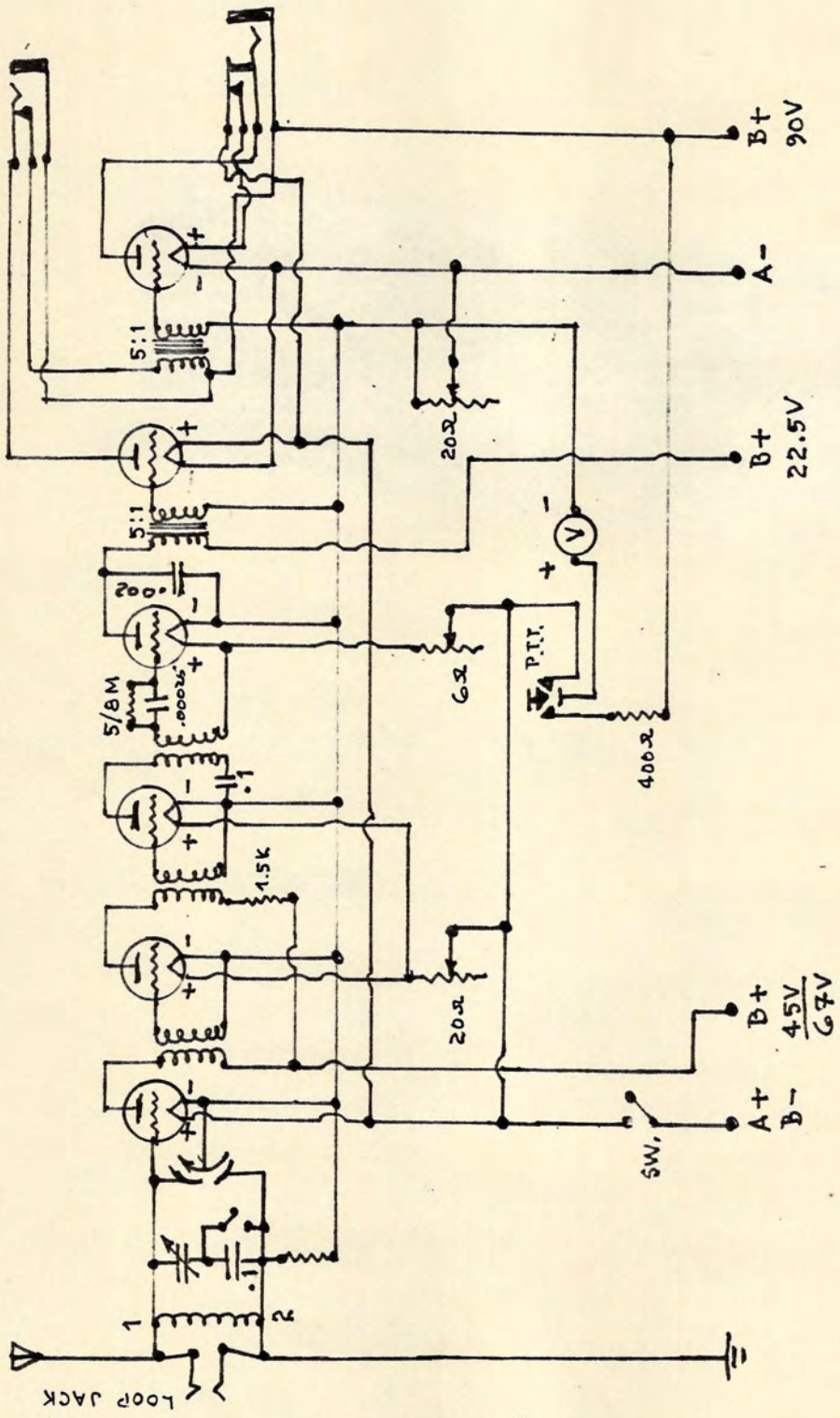

P.T.T. = Push-To-Test.
ALL COILS: PRI = 26T, #24 DCC
SEC = 42T, #24 DCC

MORRIS "SIMPLICITY" RECEIVER; 1927
(Sht.1)

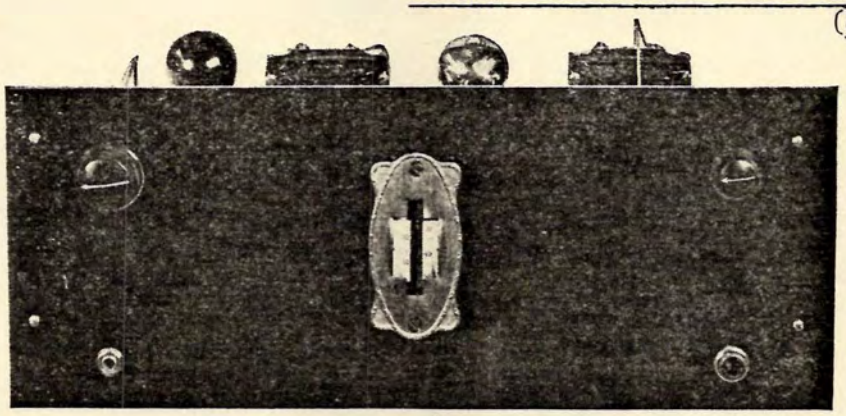

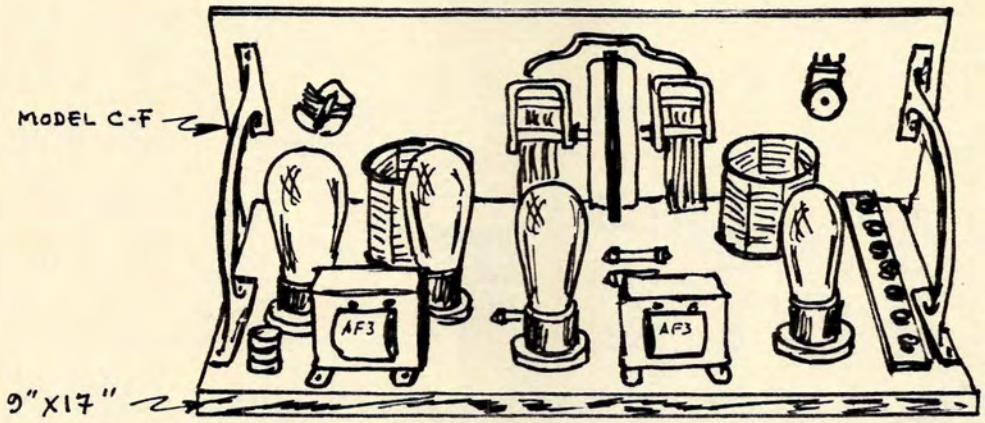

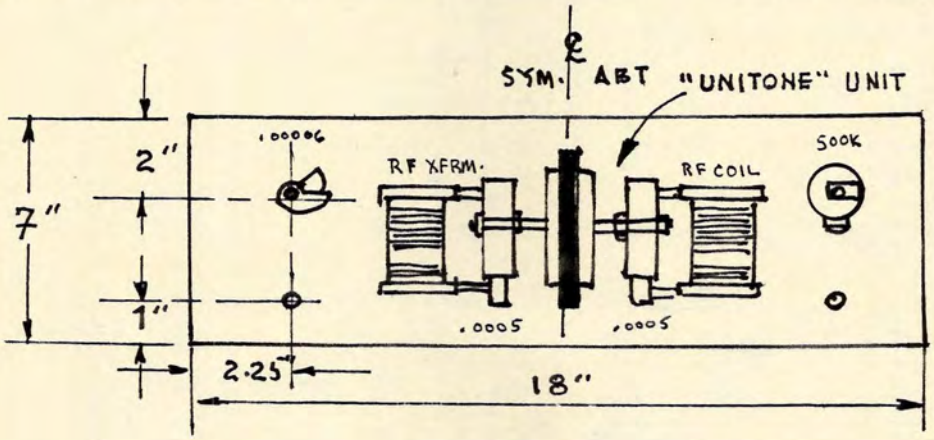

Ferranto AF-3 AF xfrmrs. "Precision" 340 RFC
Hammarlund MC-15 Midget X-L Model "N" (N/C)
Bruno RF "Unitone" unit; or, Model CF.
8 binding bposts 112 & 1-A Amperites

(R 1-27)

MORRIS "SIMPLICITY" RECEIVER, 1927
(Sht. 2)

NOTE: 1. This unit was kitted by BRUNO at $53. It is very similar to BRUNO's "Powertone" receiver, q.v.
2. The BRUNO "Unitune" unit was an RF tuning assembly, consisting of 2 RF coils, 2 variable condensres, & 2 drum-dials. It was mounted as a rigid assembly, and could be bought separately for $12 to $21.
3. The Rice system of neutralization was used; however, the Browning-Drake system worked just as well.
4. ANT coil SEC = 56 turns, tapt at turn #26.
5. Some early FERRANTI AF xfrmrs. had a terminal marked "Earth". This was and is the European equivalent for GND, not chassis ground.

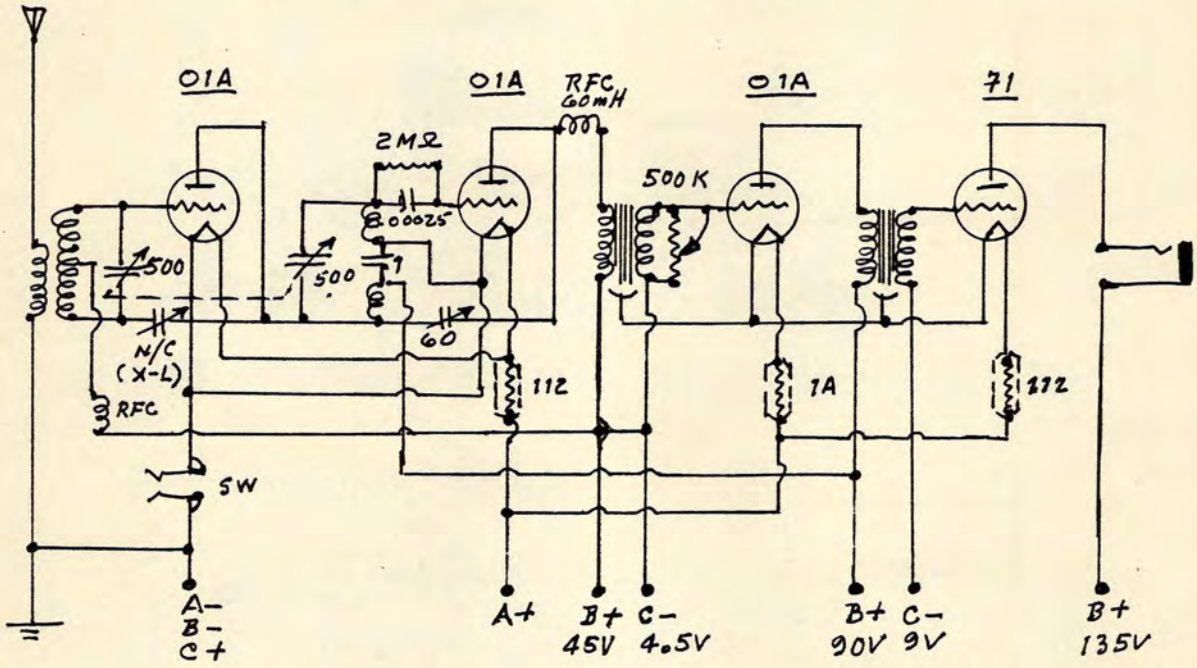

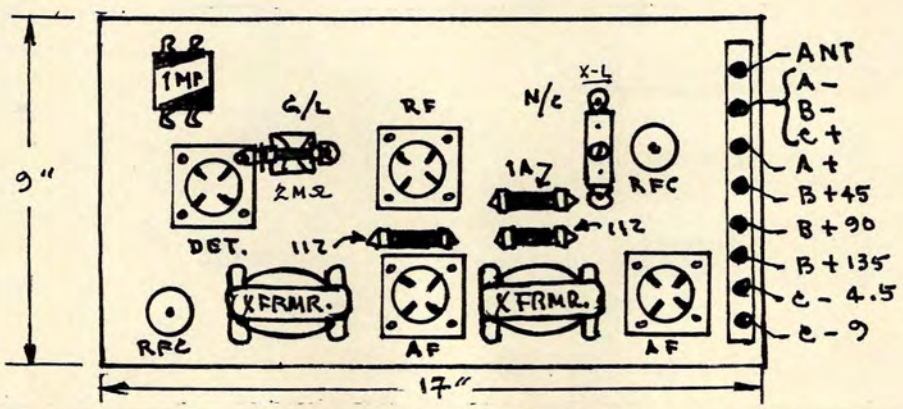

MOHAWK "NAVAJO" 5-TUBE RCVR.,: 1926
(Sht. 1)

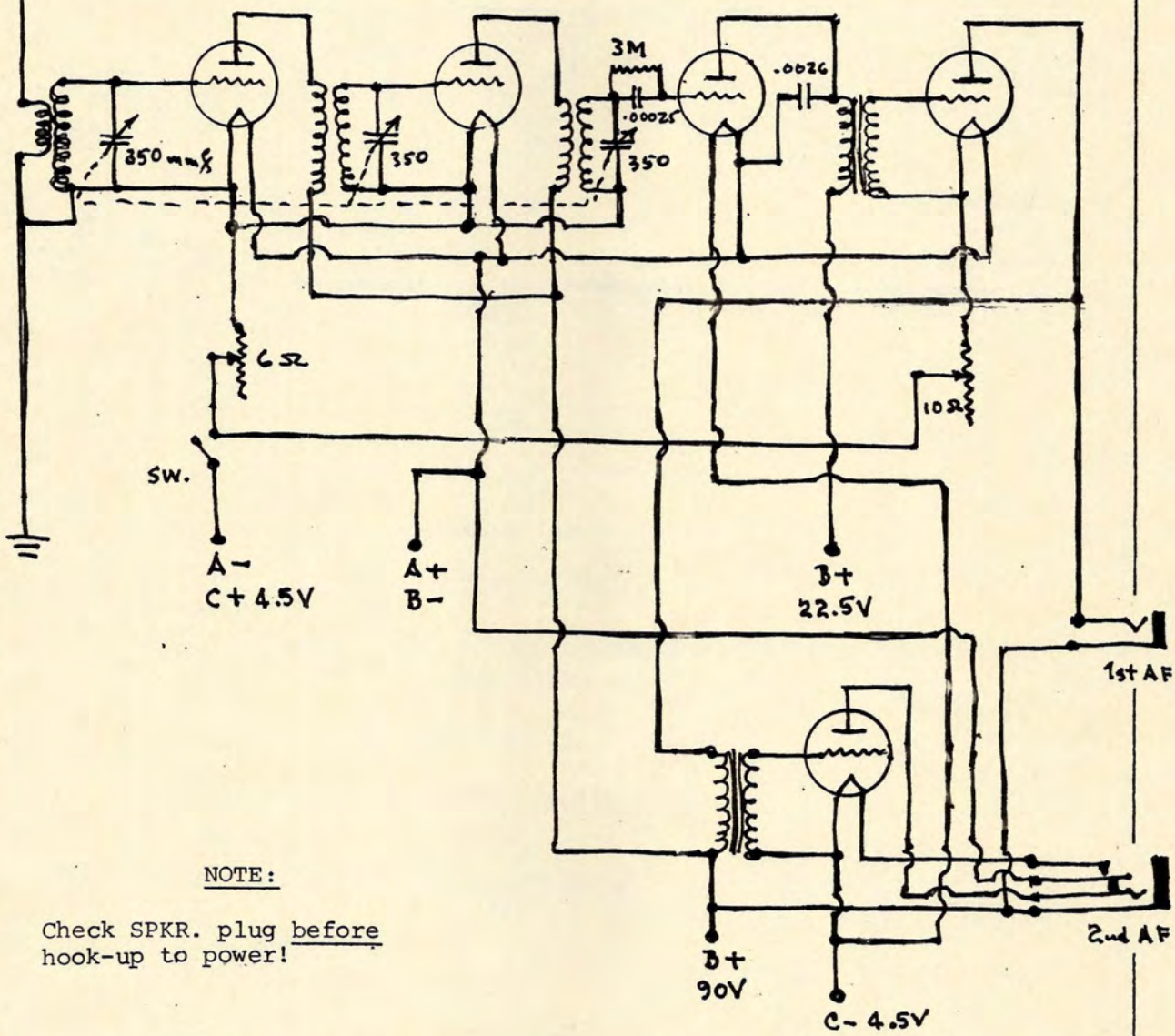

NOTE:

Check SPKR. plug before hook-up to power!

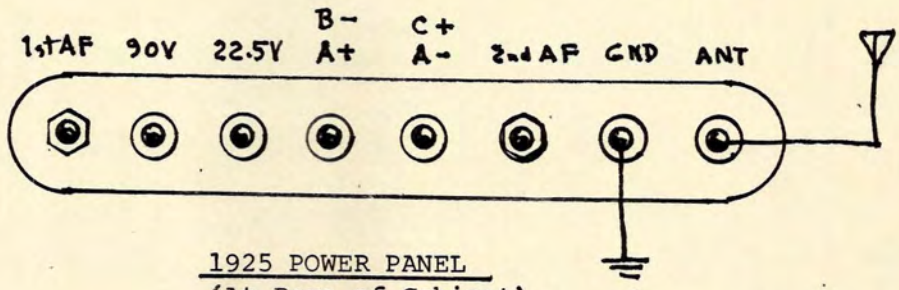

1925 POWER PANEL
(At Rere of Cabinet)

MOHAWK "NAVAJO" 5-TUBE RCVR.,1926
(Sht. 2)

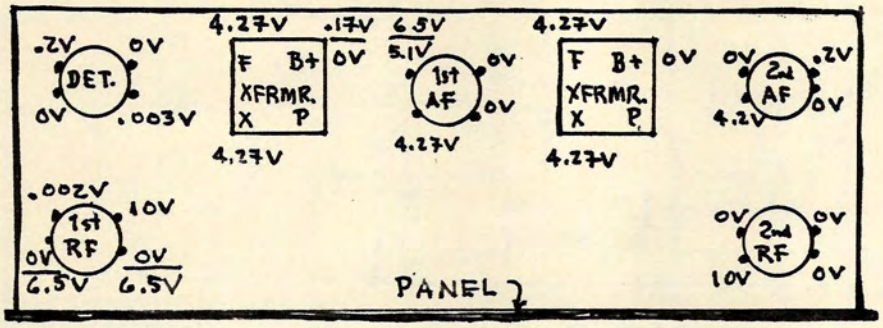

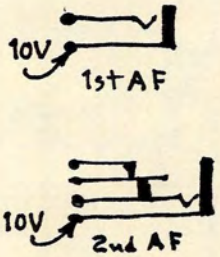

BOTTOM VIEW

1. Socket voltages are with tube removed.
2. B+ and C+ are not to be applied.
3. 6.3VDC applied at INPUT terminals & GND.
4. There should be no voltage change when rheostats are operated.
5. Switch should be opend and then closed.
6. Read dual voltages with switch ON.

NOTE: The above voltage measurements were taken from the Model "VA", 1925/1926 circuitry.

MELO-HEALD "ELEVEN" SUPER-HET, 1927; Sht.1

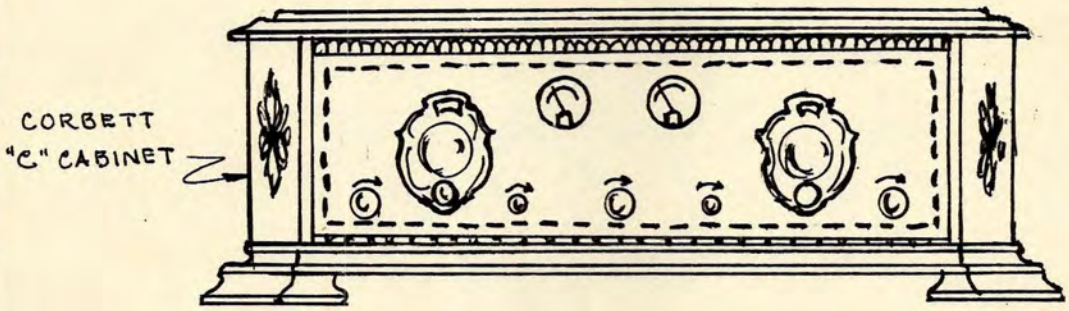

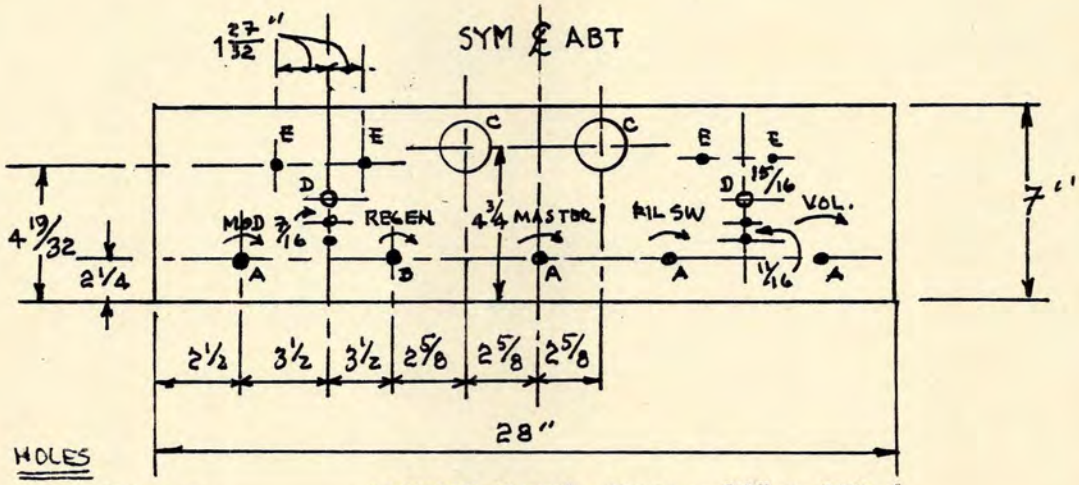

HOLES

A = 7/16" ø
B = 3/8" ø
C = 2 1/8" ø
D = 5/16" ø
E = 11/64" ø

LIGNOLE Panel. Base = 10" x 27"
(2) K-W Walnut Dials #592.
Jewell #135 & #135B Meters.
Hammarlund .0005 MFD Variables.
Hammarlund MC-9 Midget Variable.
Na-Ald Cushioned Sockets. (11)

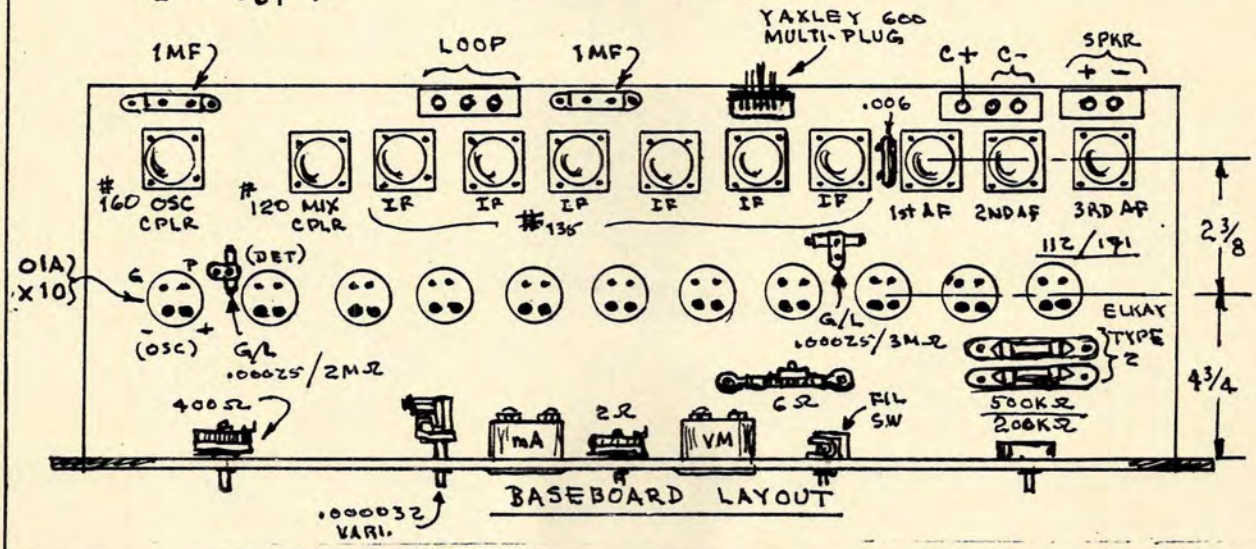

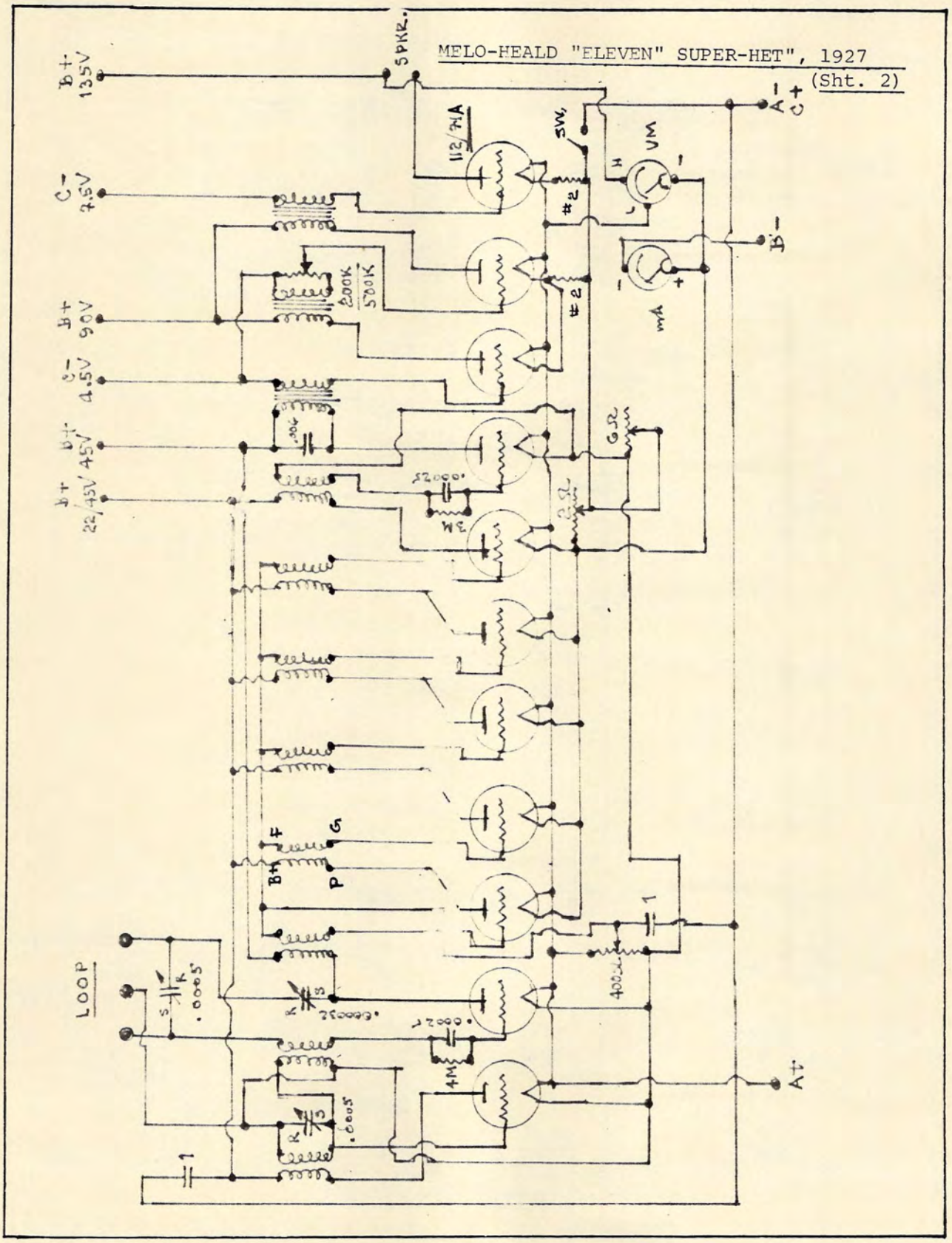
MELO-HEALD "ELEVEN" SUPER-HET", 1927
(Sht. 2)
B+ 135V
C- 7.5V
B+ 90V
C- 4.5V
B+ 45V
B+ 22/45V
5PKR.
112/71A
SW.
#2
VM
mA
200K
500K
.5M
52000
3M
GR
2.5Ω
400Ω
1
LOOP
.0005
35000
12000
4M
A+
A-
C+
B-

The Na-ald Truphonic Set

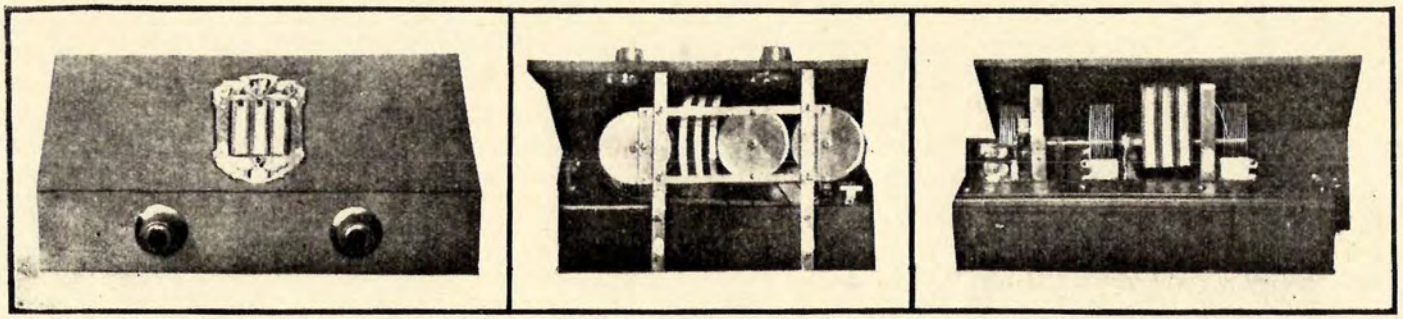

Harold P. Donle was an early practical radio scientist, a New Englander, whose contributions not only advanced the state-of-the-art, but also frightened The Octupus. He invented the Sodion tube as a superior detector, assigned the rights to The Octupus, and it was immediately taken off the market.

His association with Napier-Alden (Na-Ald) resulted in his designing the "Truphonic" audio amplifier, which is detailed farther along in these pages. Concurrently, Alden had come up with their Localised Control, in three versions, and was offered the home-constructor as a seperate item.

The cuts above depict a packaged Localised Control receiver offered by Na-Ald, which incorporated Donle's "Truphonic" unit. The same receiver was offered a little later using the excellent Welty shielded coils, which you will also find depicted herein. All this happened in 1926, a very active and fruitful year for Radio.

* * *

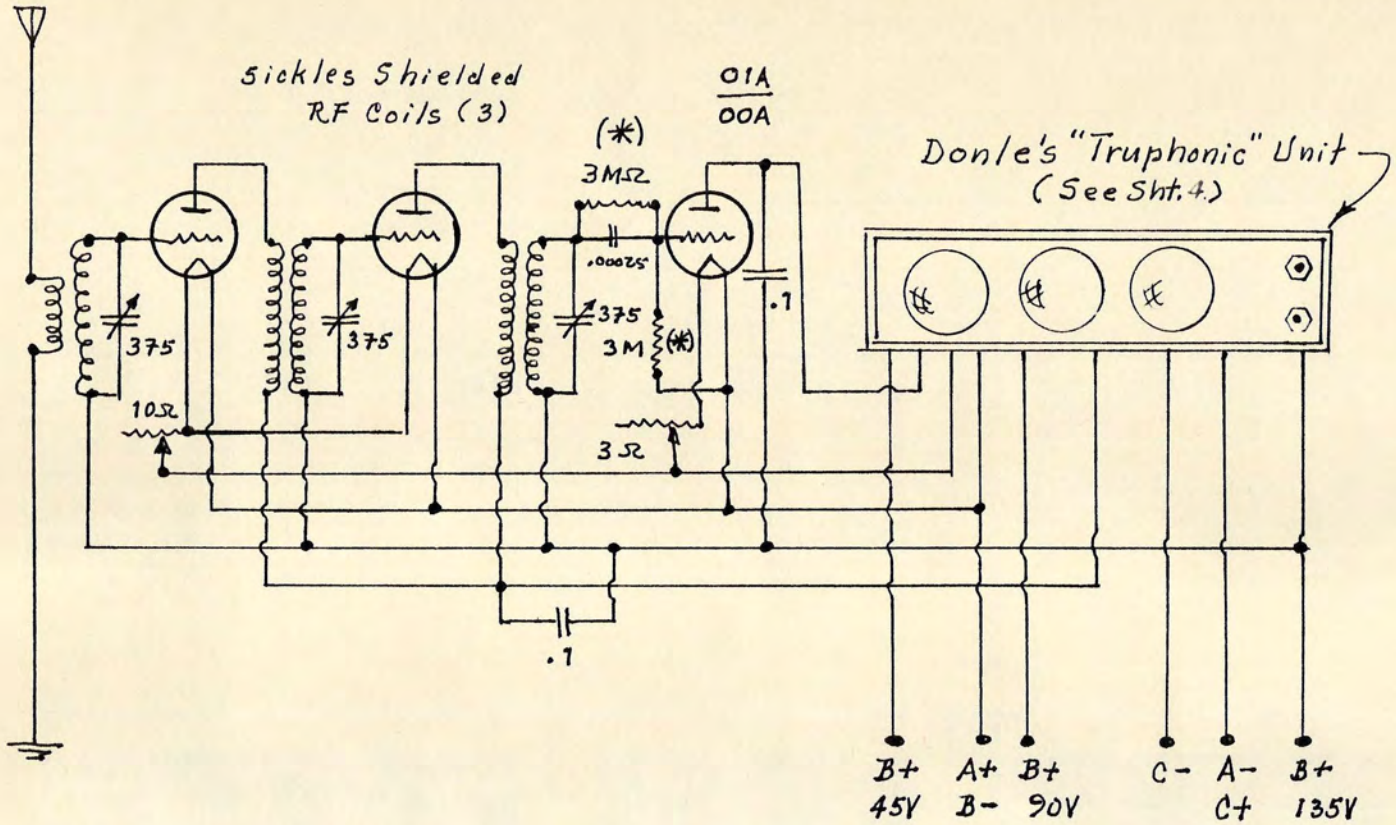

(*) = Grid-leak may be installed either way, but NOT both!

01A requires a positive grid return; 00A requires a minus grid return.

Rheostats mounted on an auxiliary vertical panel.

Flexible wiring used throughout.

NA-ALD LOCALISED CONTROL TRF; Sht. 2

NA-ALD LOCALISED CONTROL TRF, 1926; Sht. 3

The association of ALDEN and WELTY was a happy situation, in that it permitted some very fine hardware to be offered the home-constructor, on the one hand; and suggested examples of imagination at work. If you have a copy of Volume I of these Sketch-Books, then you have already seen the lovely WELTY "Etherways" receiver, built around the first ALDEN "Localised Control" concept. The term it self was merely another way of saying 'one control' of three variable condensers independently.

The receiver was among the most compact ever conceived at that time, having a suggested panel of only 14", and was offered in kit form, both seperate components or semi-factory assembled. This was one of the few circuits that made the specified components mandatory. The NA-ALD "Truphonic" was also available at the time, and would have been a precursor to the catacomb idea expressed in the following pages.

If you have the shielded WELTY rf transformers and the "Truphonic" unit, you can construct this receiver in about an hour, and incorporate the so-called improvements made in the 1927 model, which is also detailed hereinafter.

NA-ALD LOCALISED CONTROL TRF, 1926;Sht.4

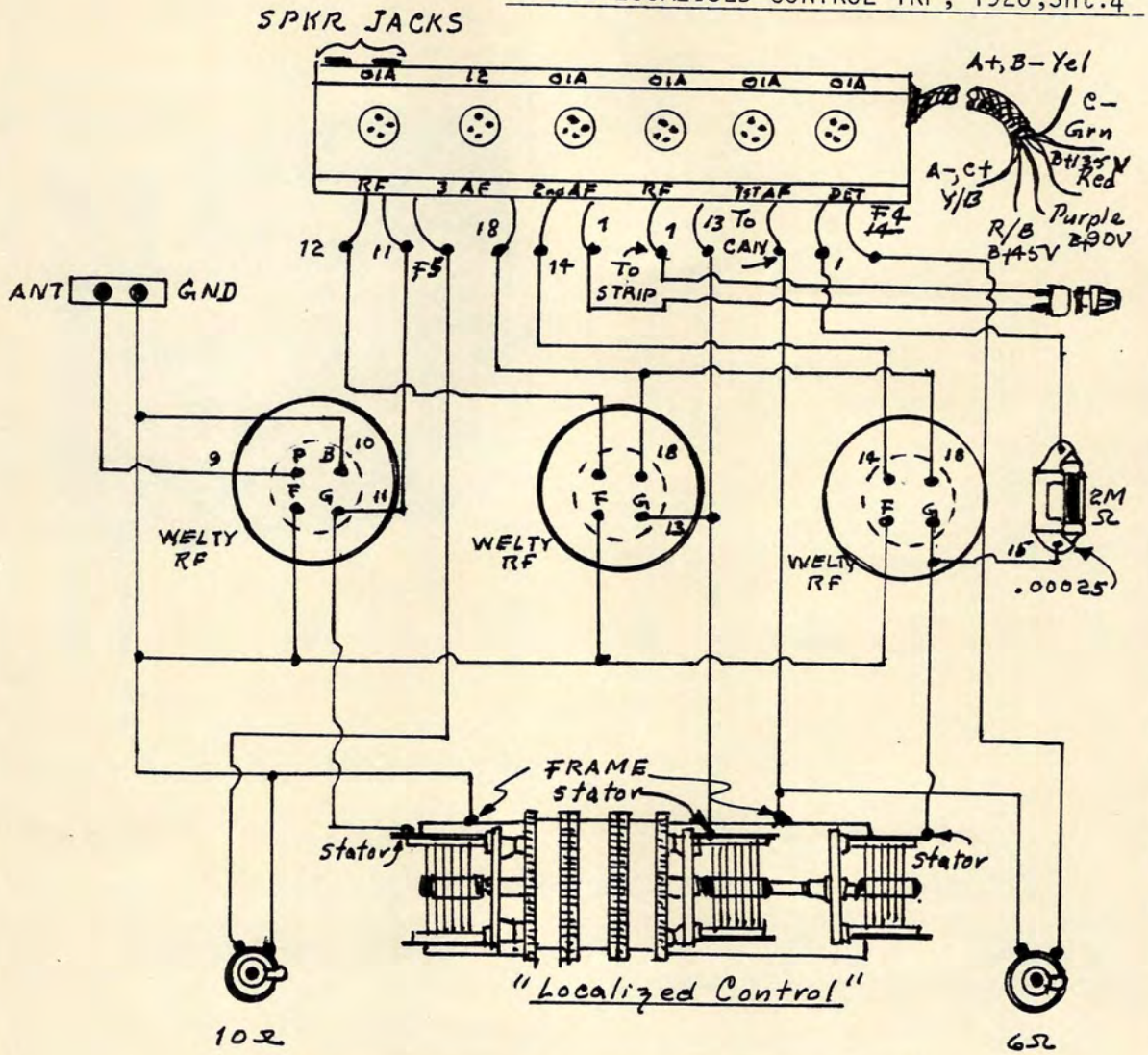

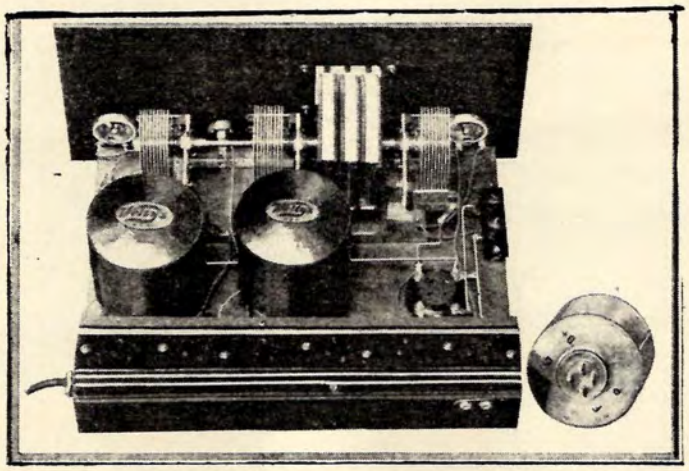

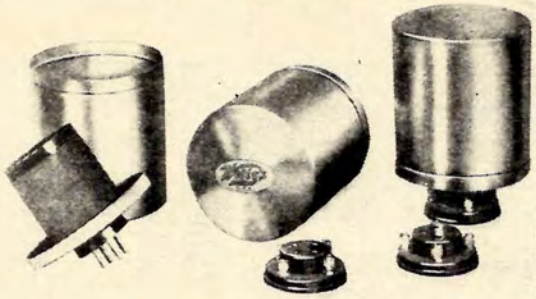

Welty's Plug-in Shielded R. F. Coils

NA-ALD LOCALISED CONTROL TRF, 1926; Sht. 5

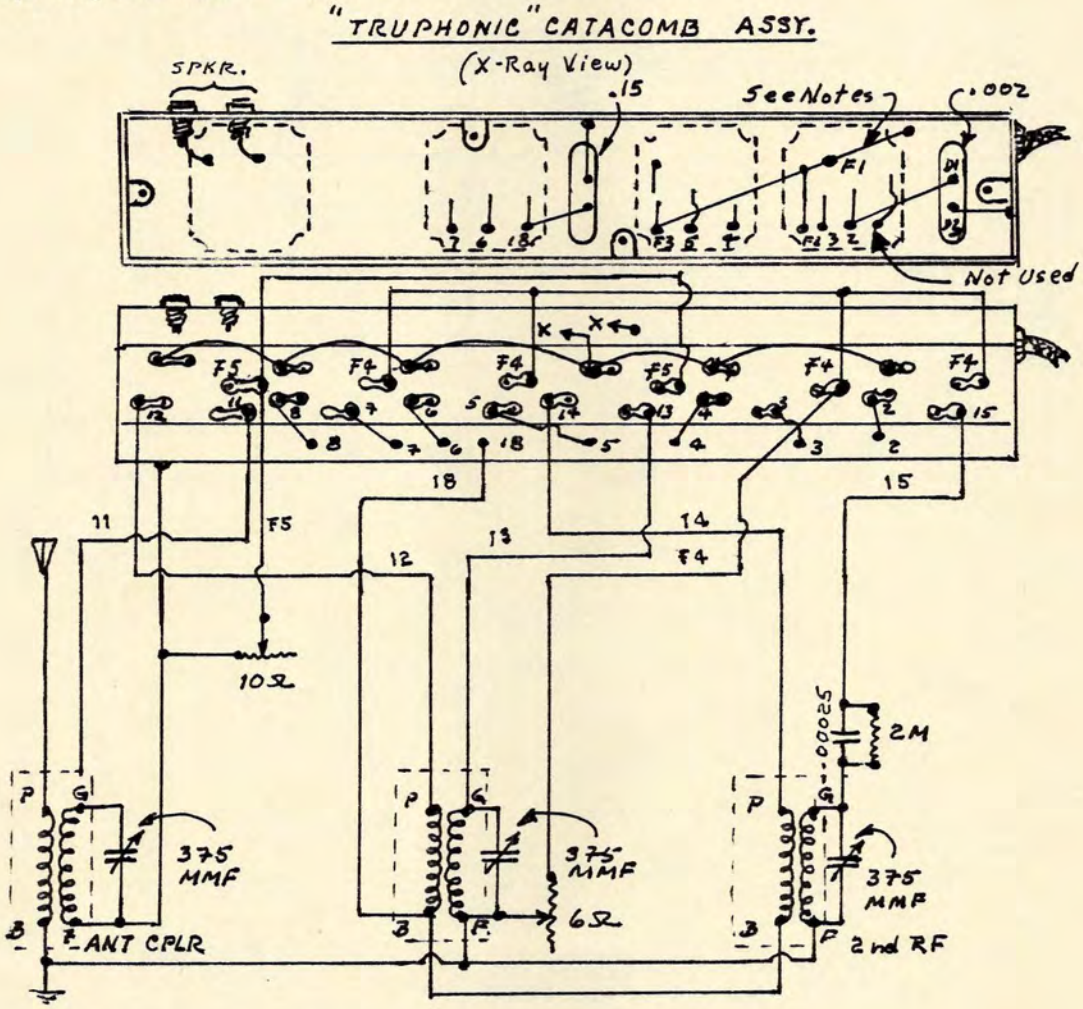

NOTES: X-X = FIL Switch.
Connect as shown, unless a "C"-battery is used.
Speaker polarity nil.
Baseb'd. = 11"x14"x½".

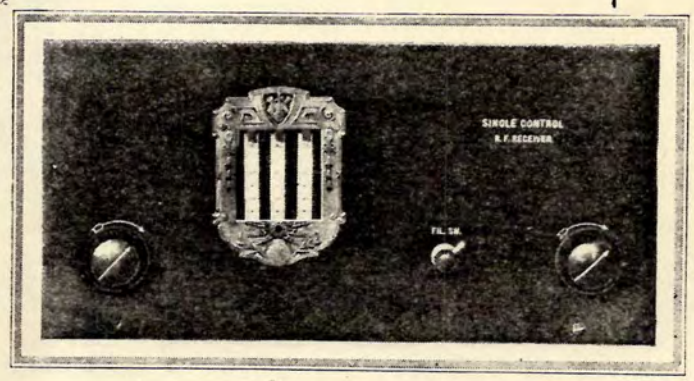

3-TUBE MARCONI RECEIVER, 1925

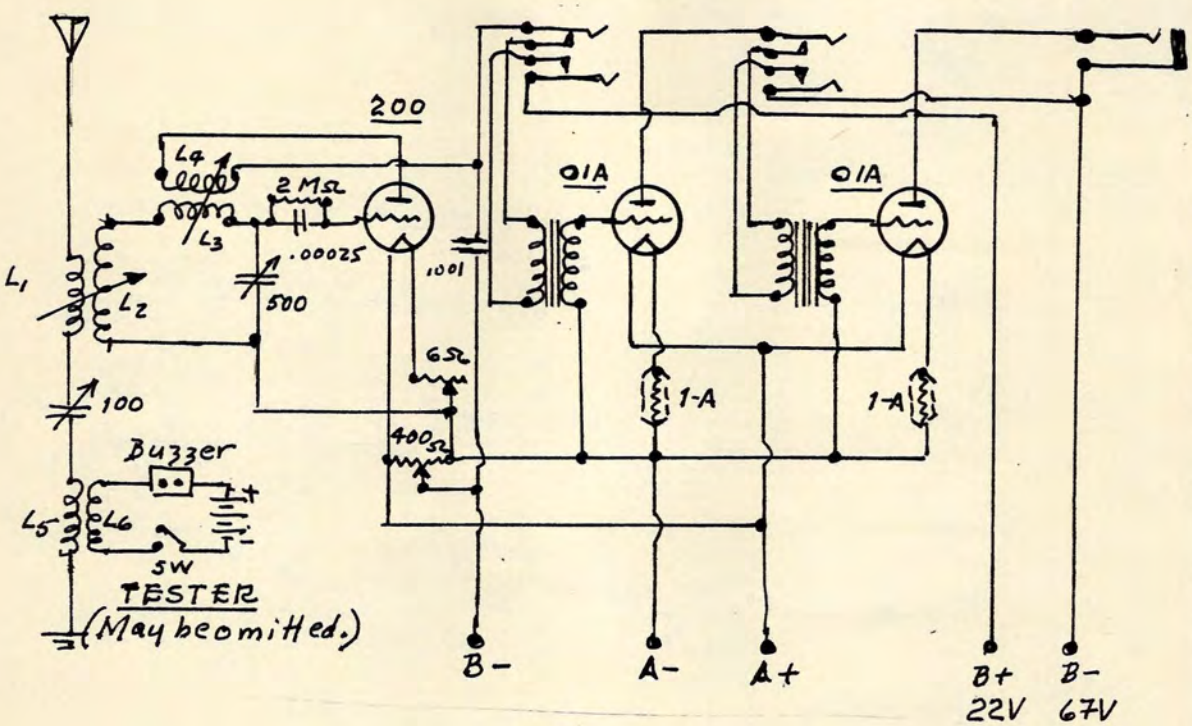

COIL DATA:

L1 = 9T, #22 DCC; Form 3"ø.
L2 = 36T, " ; " 2"ø x 3" (Rotor).
L3 = 22 T, " ; " 3"ø x 3".
L4 = 45 T, " ; " 2"ø x 3" (Rotor).

Panel = 7" x 18". 4"ø Dials (3).

NOTES:

1. The buzzer was used to determine if the PRI and SEC of L5-L6 were in resonance. If you wish to incorporate the buzzer, L5 and L6 each should have 5 turns of #14 enamelled wire wound on a 3"Ø form. L5 and L6 were inductively coupled.
2. To Operate: Switch on buzzer.
   Adjust 2-circuit until for a high-pitch note.
   This indicates resonance.
   This is the same as using a xtl. det. to check for resonance.
3. Wiring was with #14 bare copper, not buss-bar.

(RW 7-25)

THE FIRST MULTI-VALVE: (GERMAN): 1926

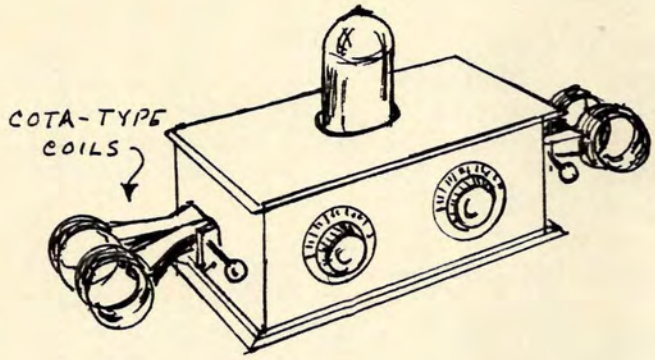

DeForest Enlightened

DAVID L. LOEWE, of the Loewe Audion Co. of Berlin, explains to Dr. Lee De Forest (at right) the functioning of the Loewe Multiple Tube. Dr. De Forest invented the three-element vacuum tube; Siegmund Loewe, David's brother, invented the tube that has a detector and two audio stages inside, including all parts and wiring, except the tuner.

The Loewe (pronounced Lur-veh) multi-valve, as such, did not make inroads into the U.S. radio market, but was a fascinating design; so much so that a few American and British tube makers invested in licenses to manufacture a similar concept. Among whom were Kellogg, Haynes, Emerson, Fleming, etc.

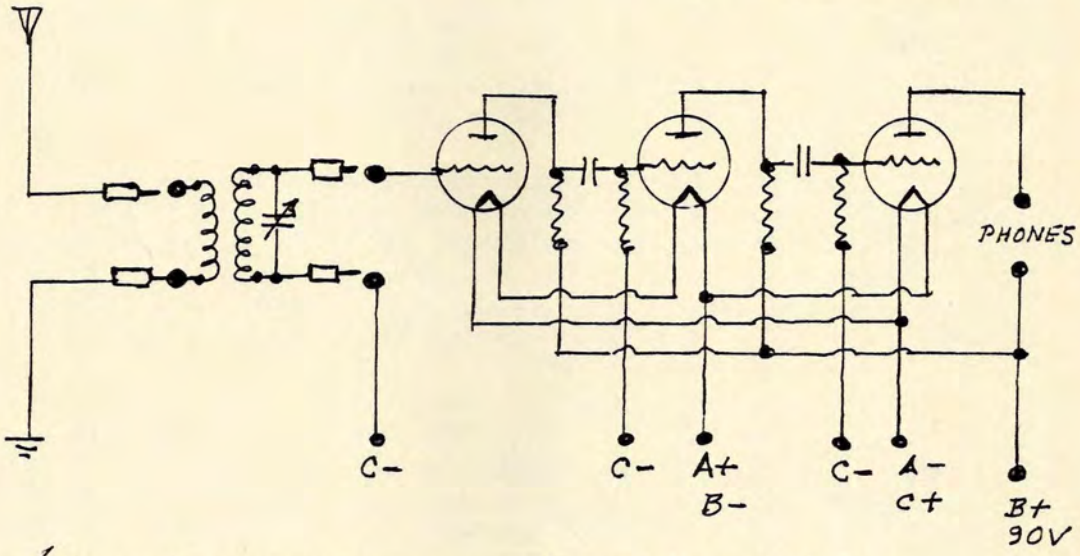

(No values were ever published here, but they can easily be rationalised.)

(RW 5-1-26)

NEWSPAPER RADIOS

Whenever a new sociological phenomenon occurs in any society, and it looks like it will endure, Big Business immediately goes into high gear to exploit it. When Radio was seen to be a new social phenomenon, Big Business saw the enormous influence it would have on sale of product and merchandise. Nearly all such businesses were from what today we would refer to as Fortune's 500.

But initial sponsorship of radio broadcasts came from the men who were responsible for it, such as Crosley, Atwater-Kent, Gernsback and other radio media publishers. They were quickly followed by business in the forms of Colgate-Palmolive-Peet, The Great Atlantic and Pacific Tea Company (A&P), Chase & Sanborn Coffee, American Tobacco, and oil companies. Madison Avenue was having a field day.

Newspaper empires were also in vogue during the Twenties, and every metropolitan newspaper had a newly created "Radio Editor". That they actually did their home-work would suggest that they were quite a different breed from modern editors. Probably the best known was an unobtrusive man who was Radio Editor for the Christian Science Monitor of Boston, Volney Hurd. He not only wrote for the paper but wrote rather extensively for awhile for several radio media.

Newspapers were probably the first to recognise the expanding merits of short-wave, and several had their own reception set-ups for the reception of foreign news broadcasts, chiefly from the then mushrooming foreign news services, chiefly Reuters and A.P. The customary practice prior to SW had been sending news dispatches via cablegrams, after the demise of spark-gap transmitters.

The Toronto "Star" was the first North American newspaper for employing SW reception in their offices, quickly followed by others. The "Star" used all Marconi equipment, and their reception was always from Chelmsford, England, a sort of clearing house for all foreign or overseas news dispatches. Needless to say, Marconi, Ltd., were not above charging dearly for their service.

Here, probably the most notable - i.e., well-known - of newspapers fascinated by Radio were the N.Y. "Times" and the Chicago tabloid, the "Daily News". The "Times" exploited their daily contact in SW with the Byrd Expedition, which naturally tended to make everyman that much more aware of Radio. You will find details of the "Times's" SW receiver in the following pages.

Aside from Hurd, the "Daily News" radio editor made a couple of interesting contributions to the game, duly reported in the media. His BC receiver will also be found herein.

* * *

NEWSPAPER RADIOS; Sht. 2

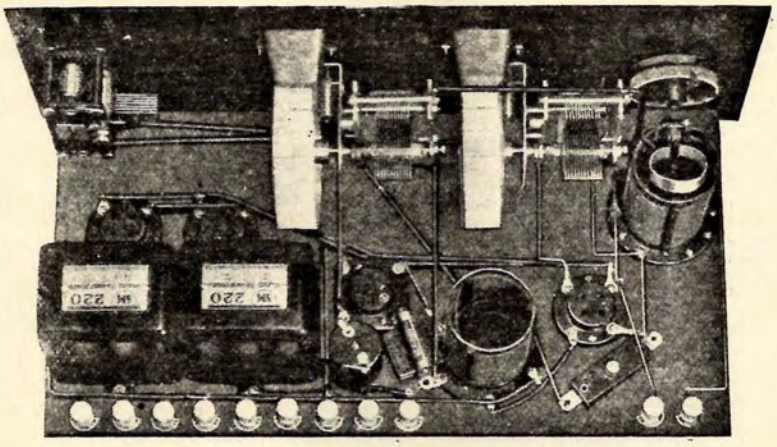

The Chicago Daily News
Four-Tube Set

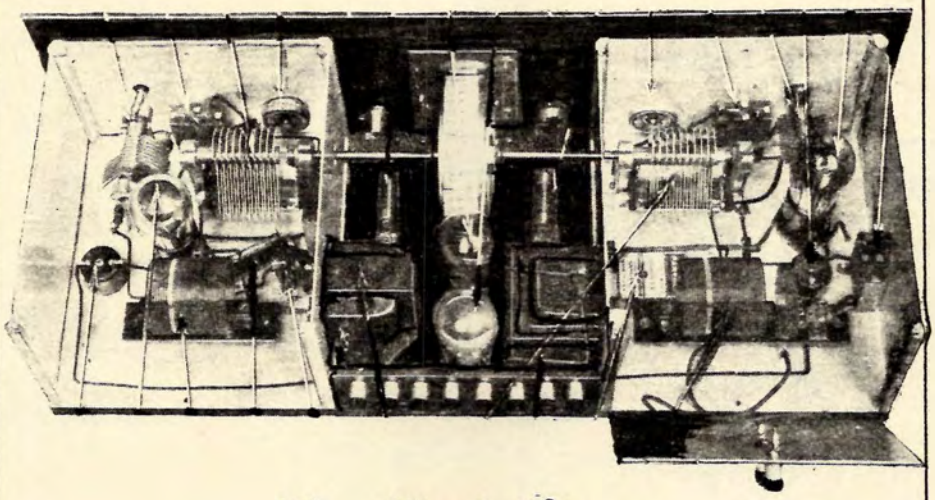

New York Times
SHORT-WAVE RECEIVER-

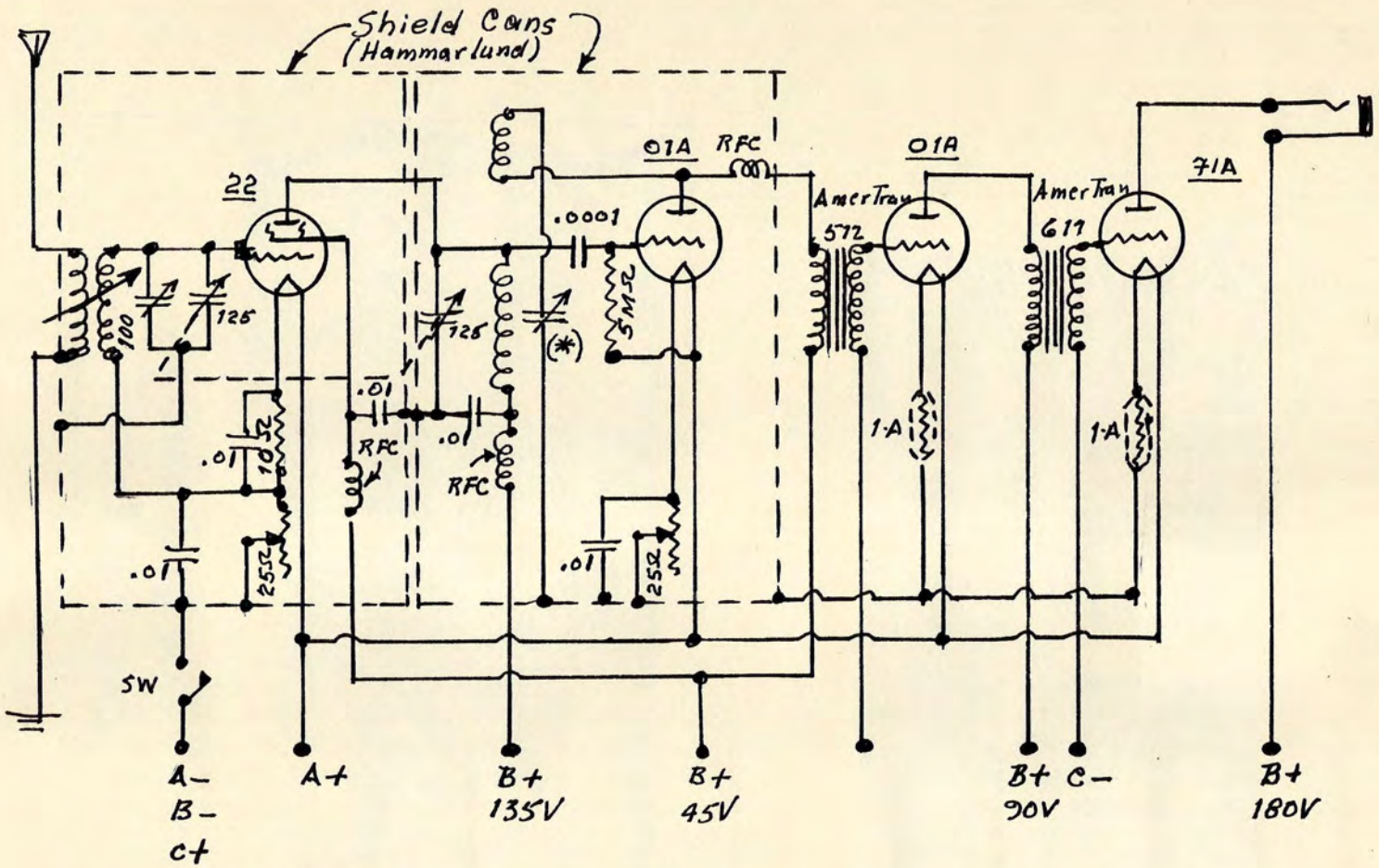

NOTES:

(*) = Nat'l. Regen. Control ET-250 (250mmf).
All RFC's = 2.5 mH. (3)
Hammarlund SW. Coils, Type SWT3 & -C3.
2-Gang Variable, Nat'l. EC-125.
Range = 15 to 250 meters.

(RN 5.29)

NEW YORK "Times"
SW. Receiver
(1929)

NEWSPAPER RADIOS; Sht. 3

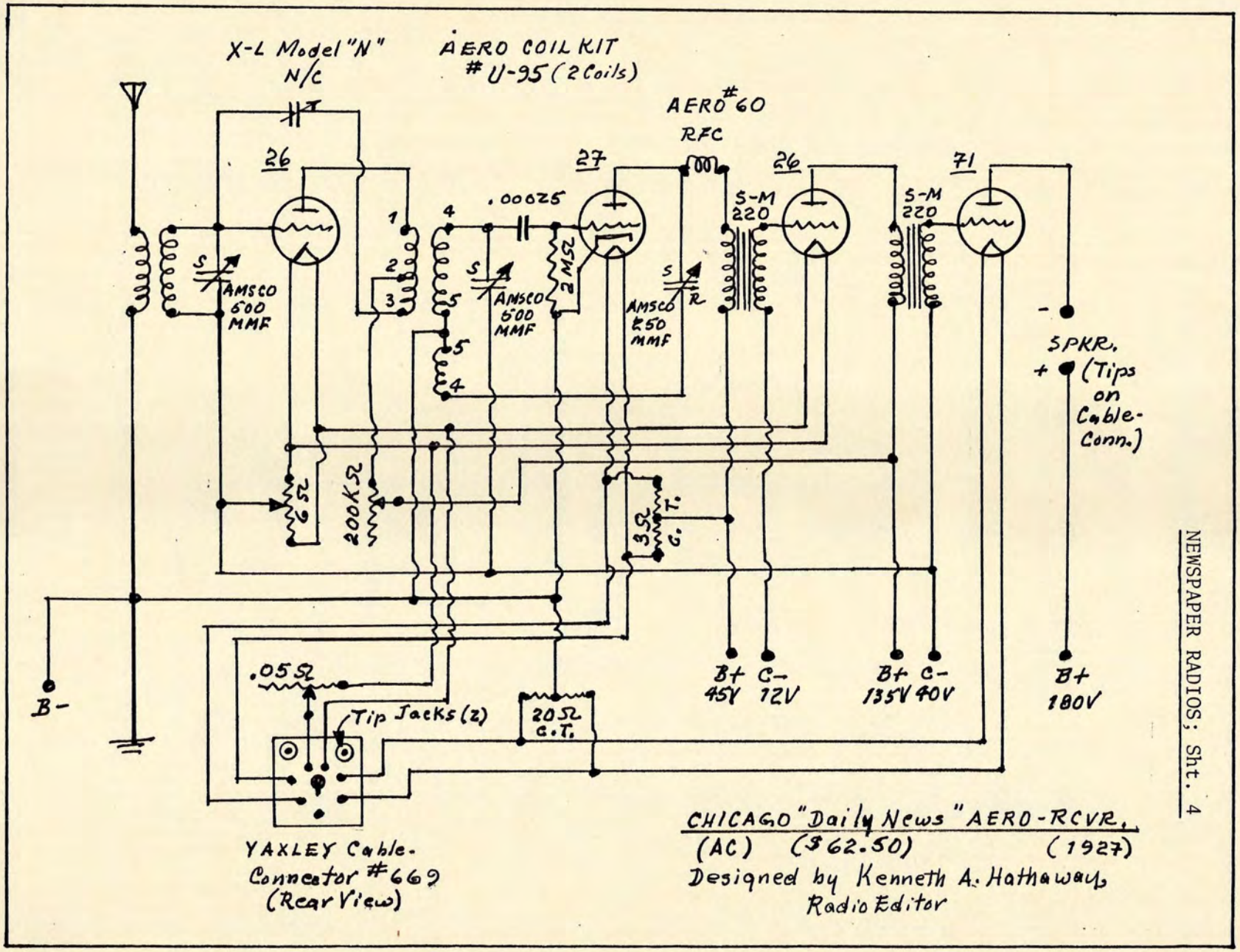

NEWSPAPER RADIOS; Sht. 4

N.Y. "HERALD TRIBUNE" ONE-KNOB RECEIVER, 1925

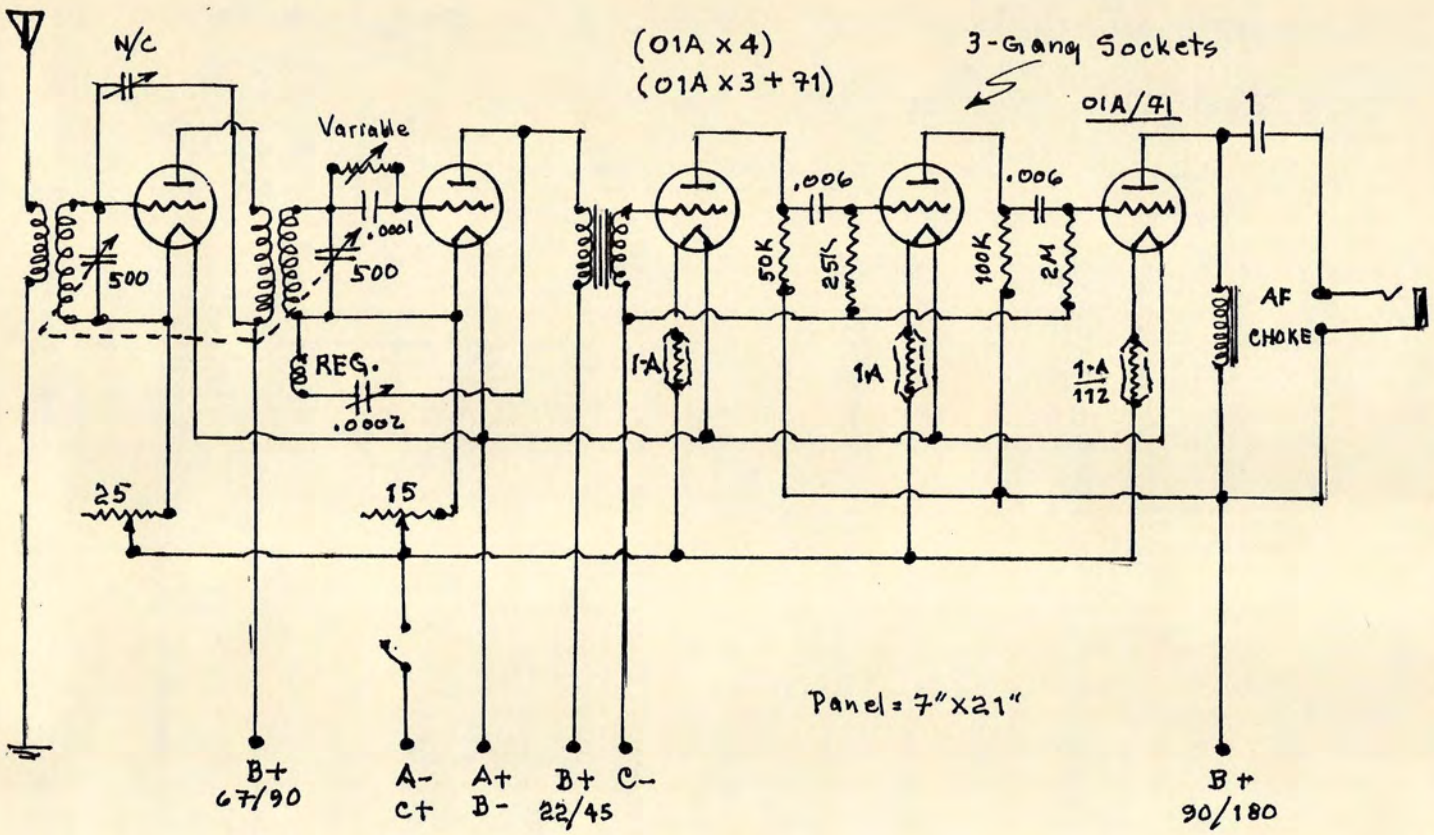

Panel = 7"x21"

ANT COIL - 3"ø x 3"
PRI = 15T # 22 DCC
SEC = 40T "
RF COIL - 3"ø x 6"
PRI = 20T # 22 DCC
SEC = 46T "
REG. = 12T # 30 DCC
} 1/8" seperation on same form.

(200-526 Meters)

"THE MULTIPLEX", NEW YORK SUN RECEIVER, 1927:Sht.1

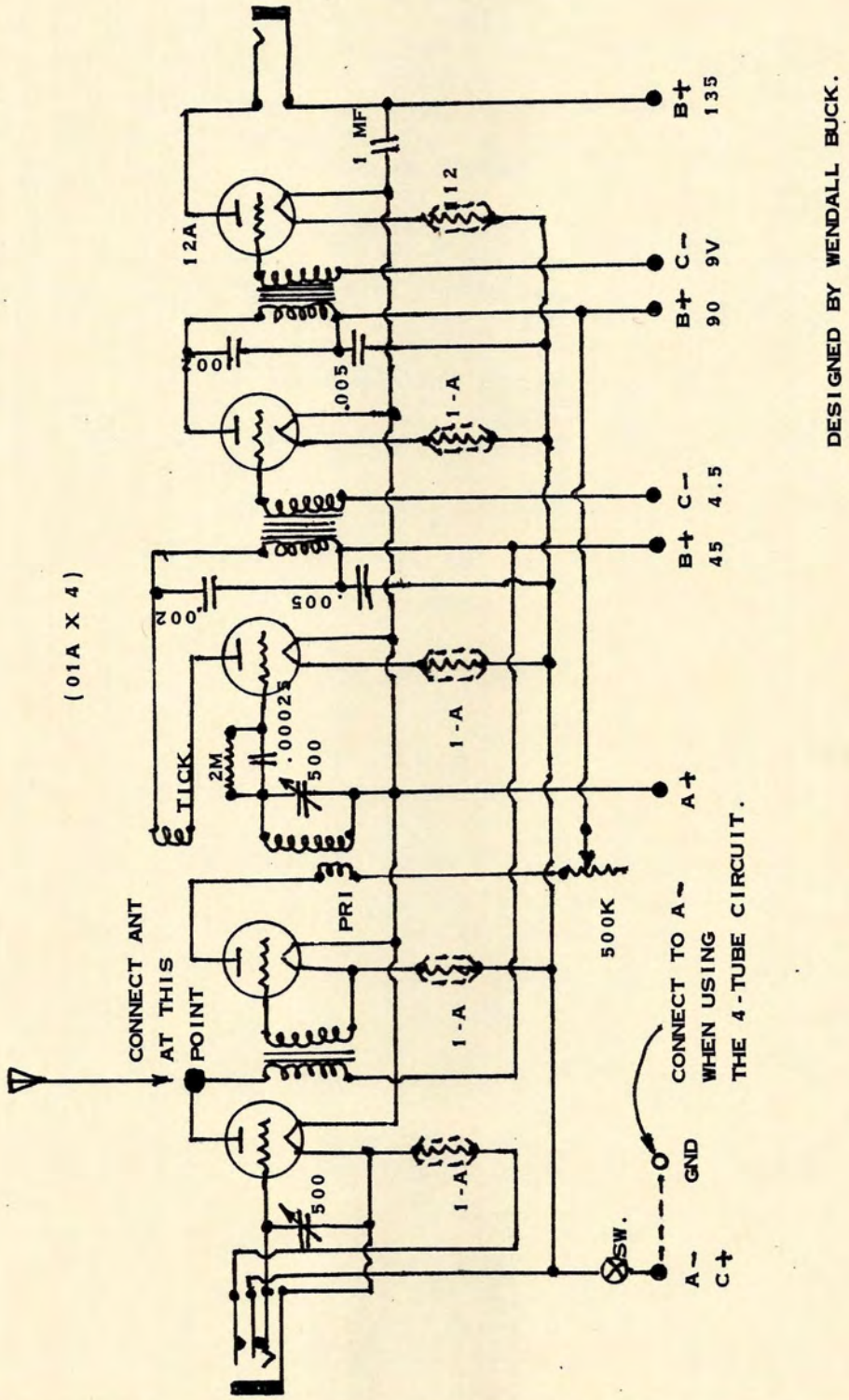

DESIGNED BY WENDALL BUCK.

"THE MULTIPLEX", NEW YORK SUN RECEIVER, 1927:Sht. 2

An ordinary 3-circuit tuner may be substituted for the double-rotor called for in the parts list. To attach a wire aerial, pull the loop plug, which takes the first RF tube out of the circuit, and connect the aerial at the point indicated on the schematic. This also becomes a single-control receiver. Receiver can be adapted to 99-type tubes by simply changing the Amperites to suit the 99s. The original receiver had a binding-post marked "Input", where the aerial was connected.

Parts required are obvious from the schematic, and no special manufacturer's component was specified, thus making it simple for the home-constructor to use what he had on hand, or select his own.Like all "Newspaper Radios", the "Multiplex" was designed with everyman in mind.

The panel was 7" x 21", and the baseboard (wood) was 7" x 20". Like most TRF's of this type, tuning was very sharp, and the inherent selectivity of a loop, for example, is materially aided by the variable rotor marked PRI.

* * *
* *
*

NORDERN-HAUCK SUPER DX-5, 1928

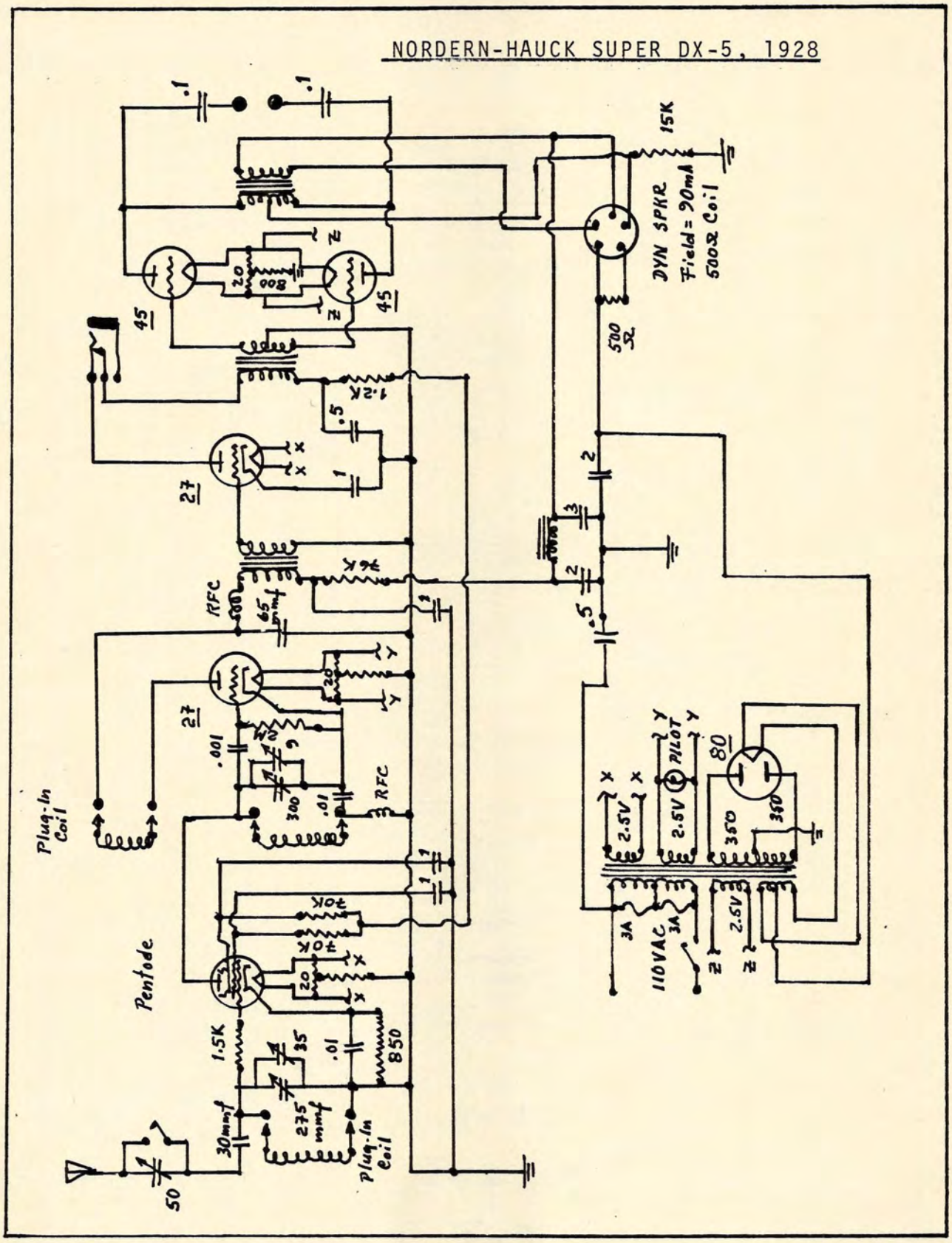

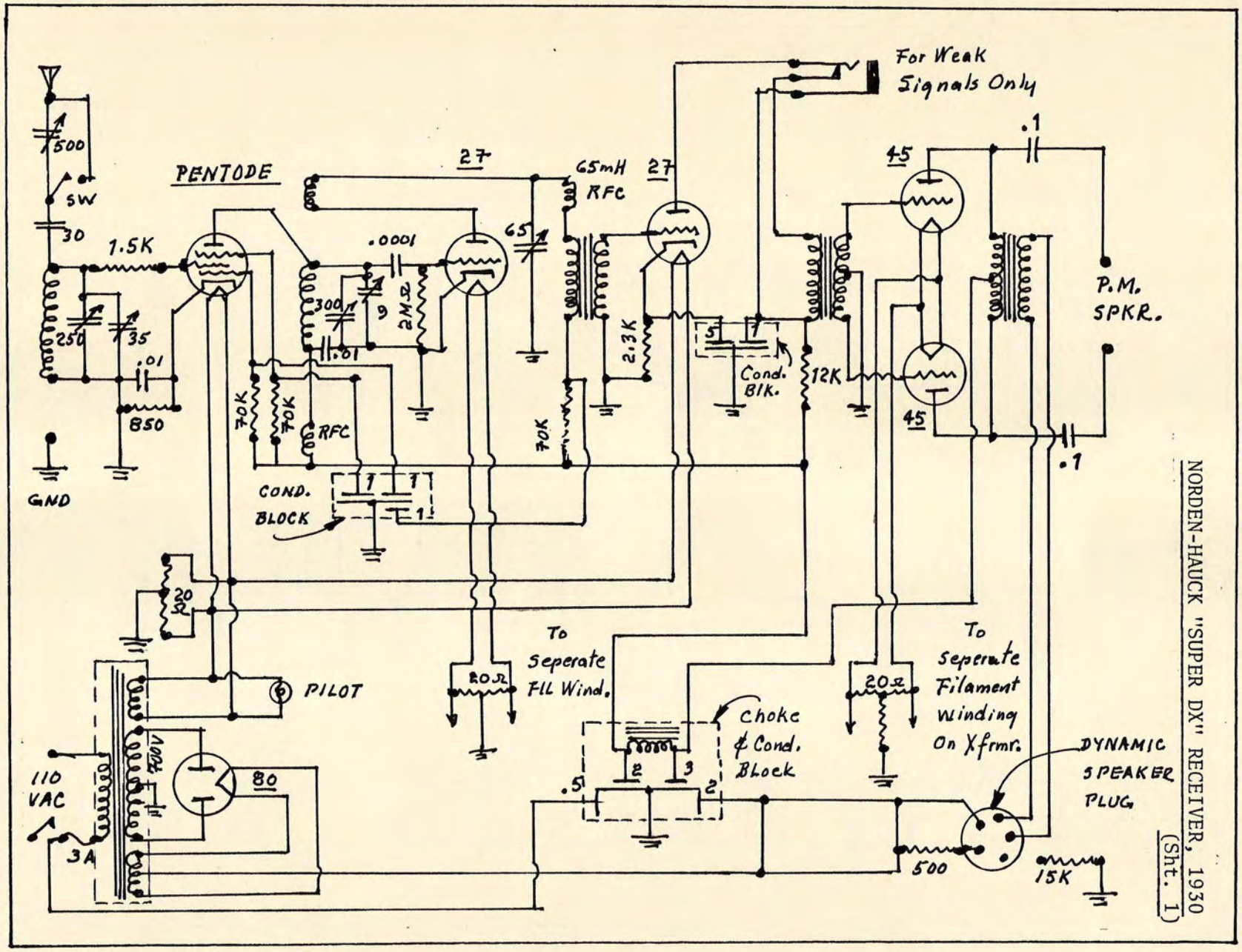

NORDEN-HAUCK "SUPER DX" RECEIVER, 1930 (Sht. 1)

NORDEN-HAUCK "SUPER DX" RECEIVER ;'30
(Sht. 2)

GENERAL NOTES:

1. To use PM speaker, disconnect plug marked DYNAMIC SPKR.
2. There may be a slight increase in hum: a choke may be plugged in.
3. 3 sets of plug-in coils originally supplied by N-H: 1,500 to 15,000 KC.
4. Variable condensers are mounted in vertical position, a'la Grebe.

(CB-9-30)

PIERCE AIRO
CHASSIS
Model-B

3 RF Stages - Detector - 2 AF Stages - SLF Variable Condensers - Coils = 1.5" Ø - Sub-Panel 7" x 17" Aluminum - Panel = 7" x 18". Audio section was resistance-coupled.

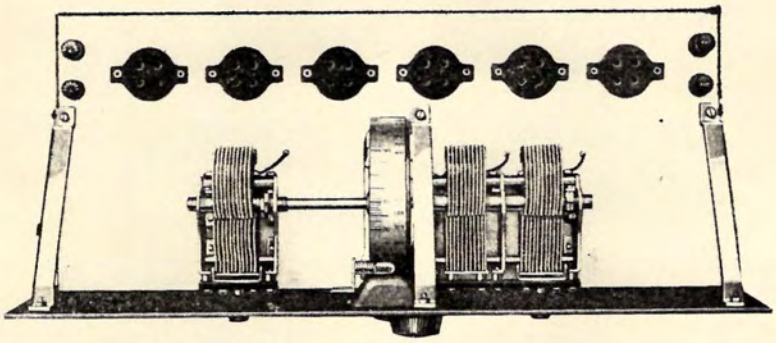

PIERCE-AIRO Model B, 1927; Sht. 2

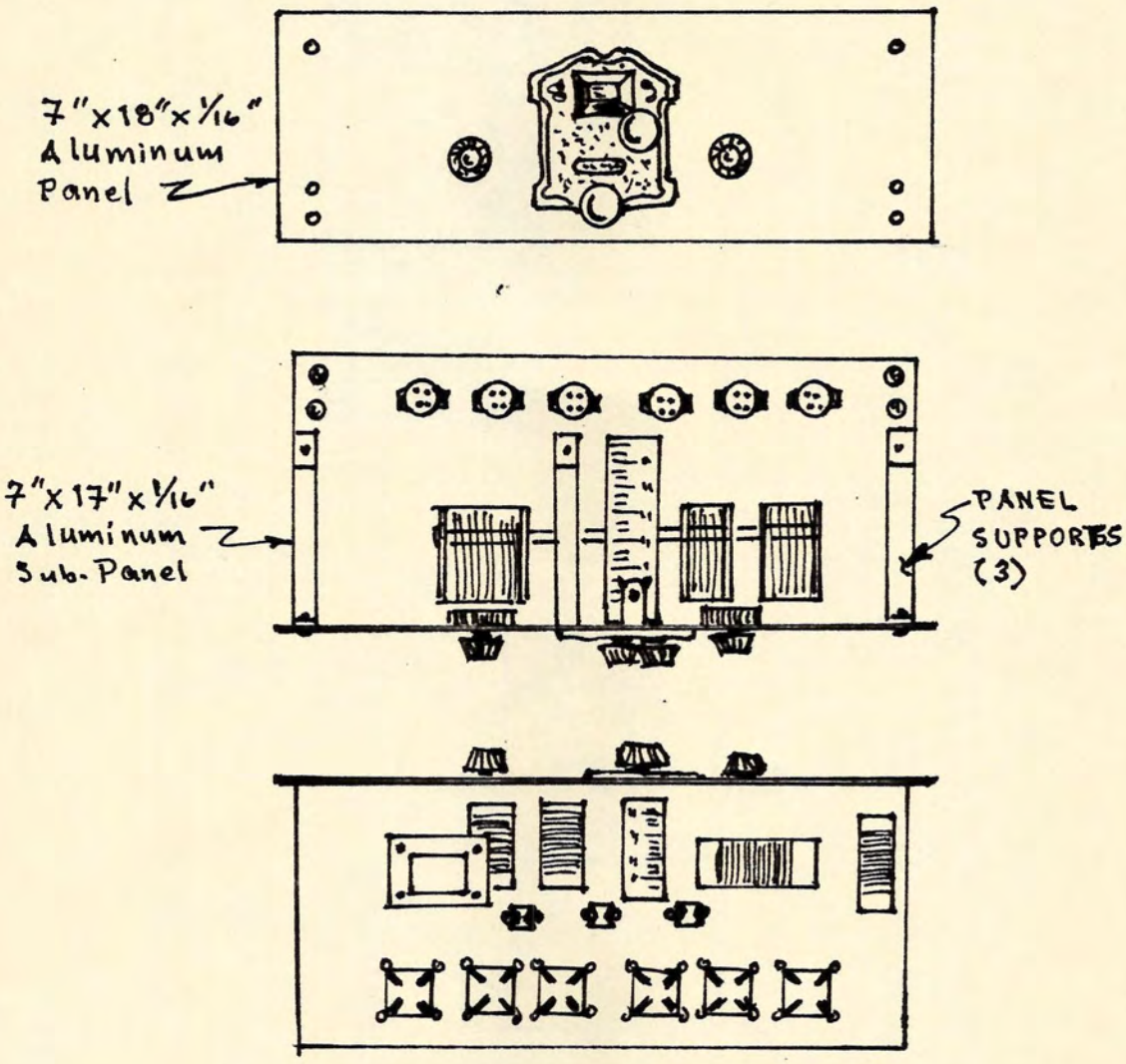

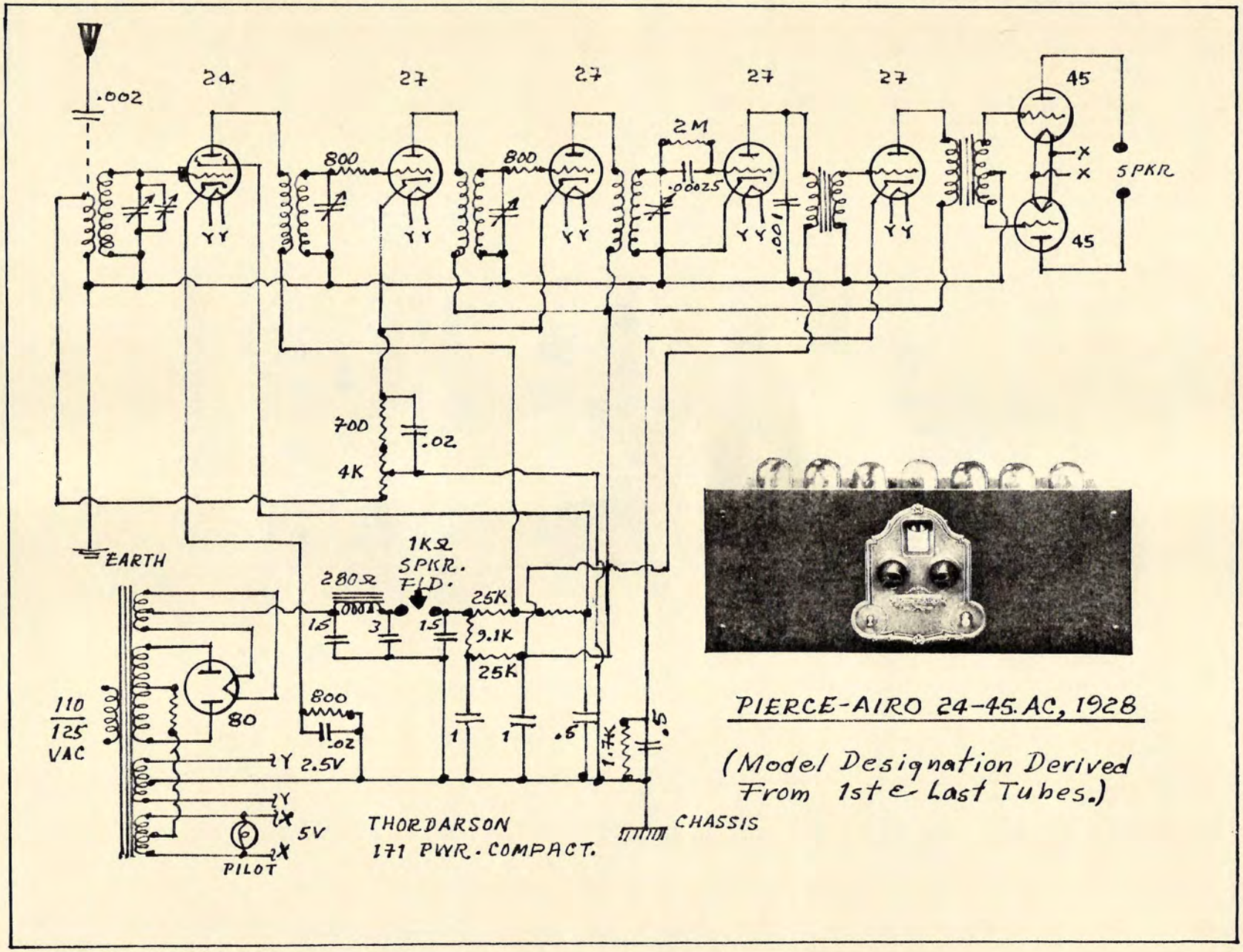
.002
24
27
27
27
27
45
45
800
800
2M
.00025
.001
X
X
SPKR
YY
YY
YY
YY
YY
700
.02
4K
EARTH
1KΩ
SPKR.
FLD.
280Ω
.001
1.5
3
1.5
25K
9.1K
25K
110
125
VAC
80
800
.02
1
1
.6
1.7K
.5
Y 2.5V
Y
X 5V
X
PILOT
THORDARSON
171 PWR. COMPACT.
CHASSIS
PIERCE-AIRO 24-45 AC, 1928
(Model Designation Derived
From 1st & Last Tubes.)

A REFLEXED NEUTRODYNE, 1925; Sht. 1

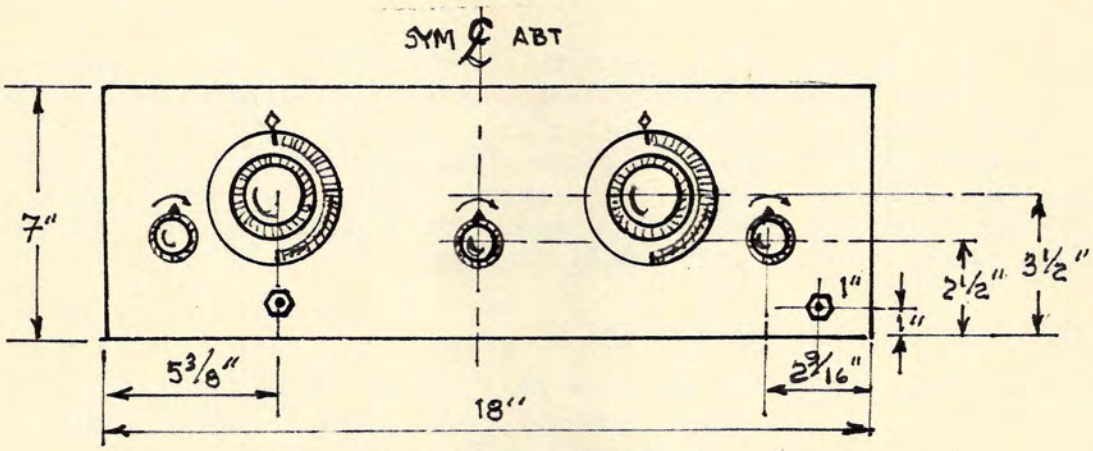

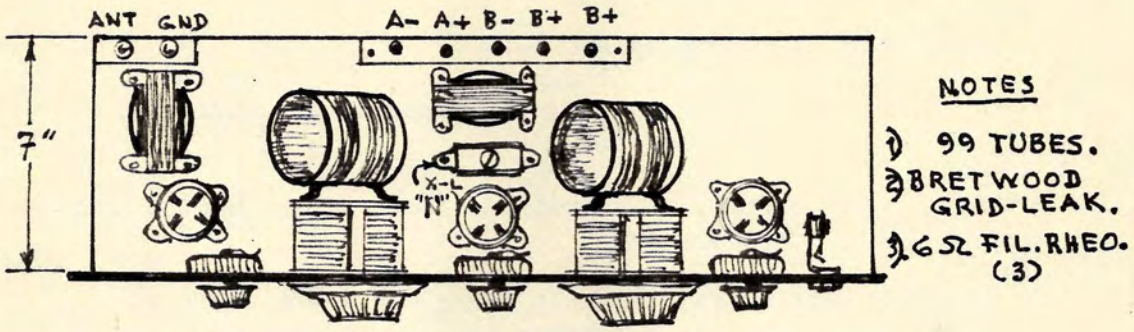

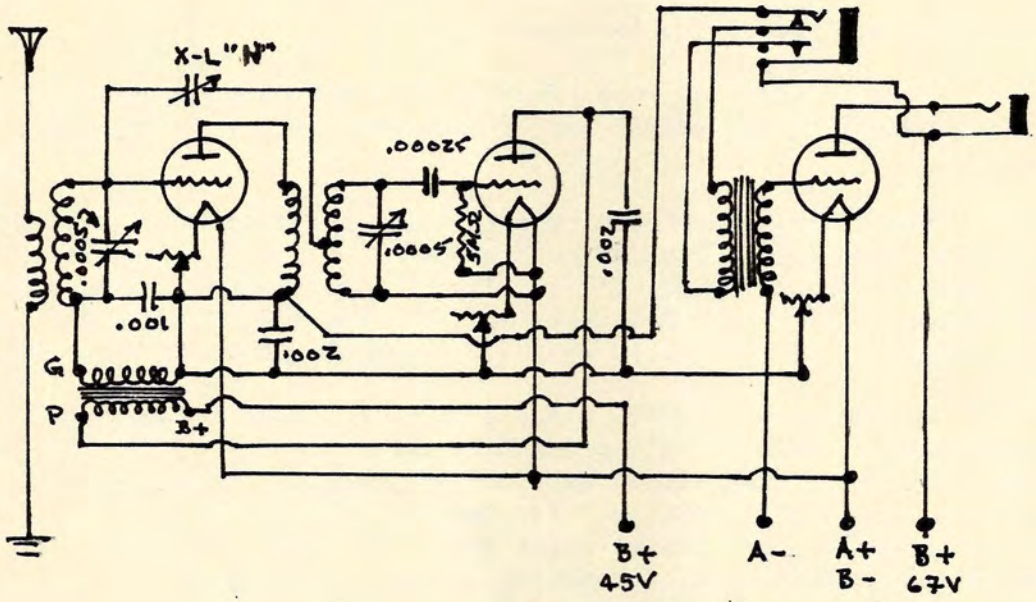

A REFLEXED NEUTRODYNE, 1925; Sht. 2

What is interesting about this set is that it was a radical departure from the concretised belief that only a 5-tube Neutrodyne was feasible. Engineers of the Twenties insisted that any set employing less than 5 tubes would compound the difficulties of neutralising, and would never have adequate volume. Percy Warren, in 1925, decided to reflex the Neutrodyne, and this was the result. The results, according to media of the day, were "eminently satisfactory".

Coil data are as follows:

ANT Coil = 12 turns of #22 DCC wire on a 3" Ø form; space 1/8th of an inch, then wind 45 turns for the GRID coil.

Plate Coil = Same as ANT coil; GRID coil same as ANT coil, with the 12th run tapt for the Neutralising condenser connexion.

The other end of the Neutralising condenser is connected to the stator of the first variable.

The "G" post of the first AF xfrmr. is connected to the grid return of first GRID coil and the other AF xfrmr. secondary connexion, as shown on the schematic. The first AF xfrmr. is of high ratio; the other, low.

The X-L Vario-Denser is the Model N.

Coil forms are both 4" long; four soldering lugs on each form. Drill a small hole between the PRI and SEC windings as a feed-through for wire.

Small brass angles are used to attach the coils to the end-plates of the variable condensers, both being home-made. Do not tighten these angles too tightly, as the angle of installation for the coils will have to be ascertained by trial-and-error. The conventional angle for Neutrodyne receivers of the period was 57.3°, and should be tried first.

When neutralising the set, place a piece of paper between one of the FIL prongs of the second tube and its contact spring. Turn the set on and fish for a strong local station. Adjust the X-L unit until any interstage coupling disappears. If, however, the set begins to oscillate, change the angle of the coils until the noise disappears. Then leave the X-L unit alone. Rotate both dials simultaneously.

* * *

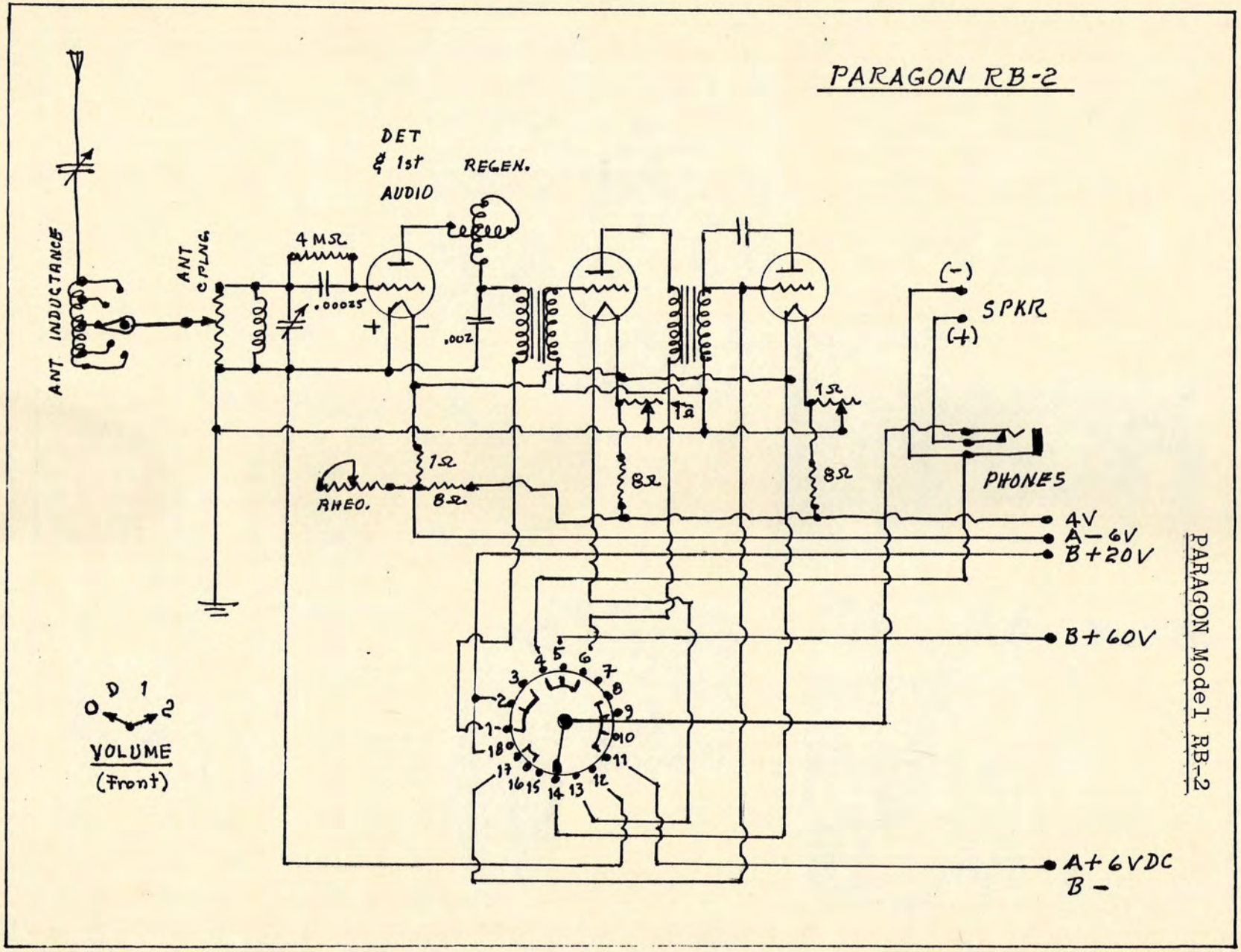
PARAGON RB-2
DET & 1st AUDIO
REGEN.
ANT INDUCTANCE
ANT C PLNG
4 MΩ
.00025
.002
1Ω
8Ω
RHEO.
(-)
SPKR
(+)
PHONES
4V
A- 6V
B+20V
B+60V
A+6VDC
B-
VOLUME
(Front)
PARAGON Model RB-2

PORTABLE CONFIGURATIONS

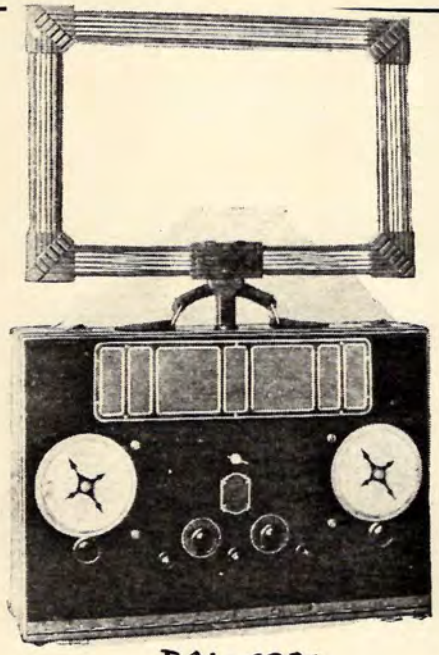

RCA- 1926

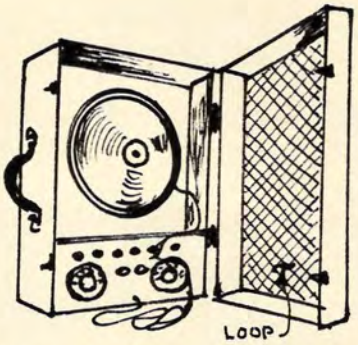

PRESSLEY-SANGAMO
PORTABLE - 1925-$135
(Rossiter, Tyler, McDonald, NYC)

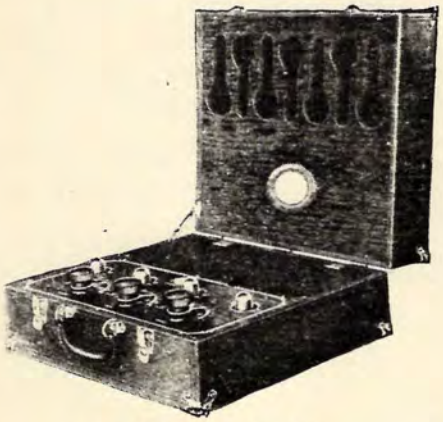

OZARKA-1926

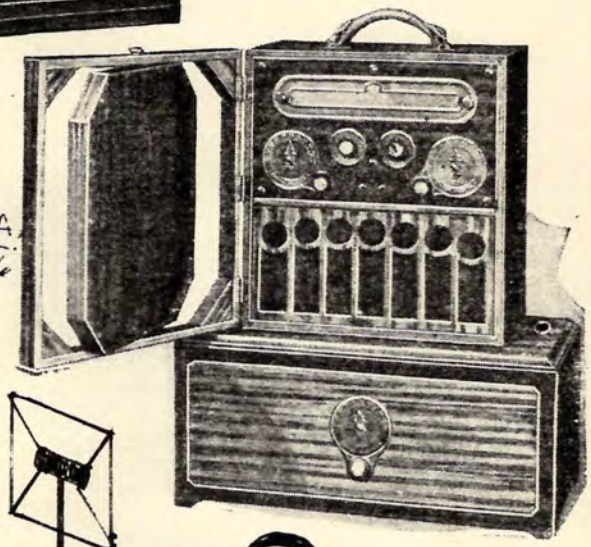

R.C.A.
1926

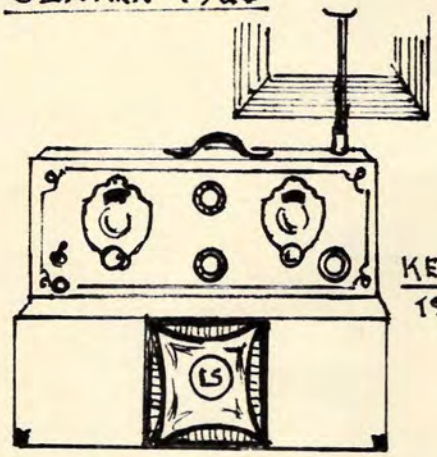

KEMPER
1927

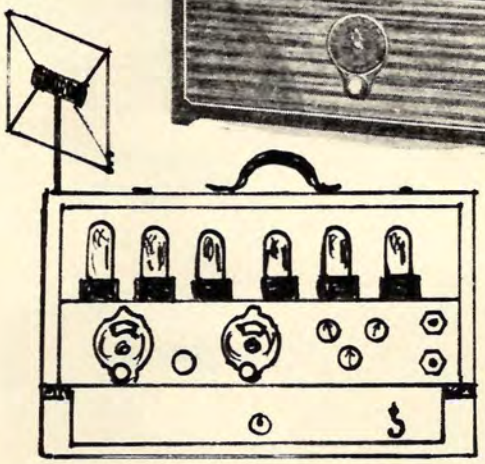

"RAMBLER SIX" PORTABLE
Am. Interstate
(1926 - $90 - 25#)

POWERTONE UNIVERSAL PORTABLE, 1933; Kit $9

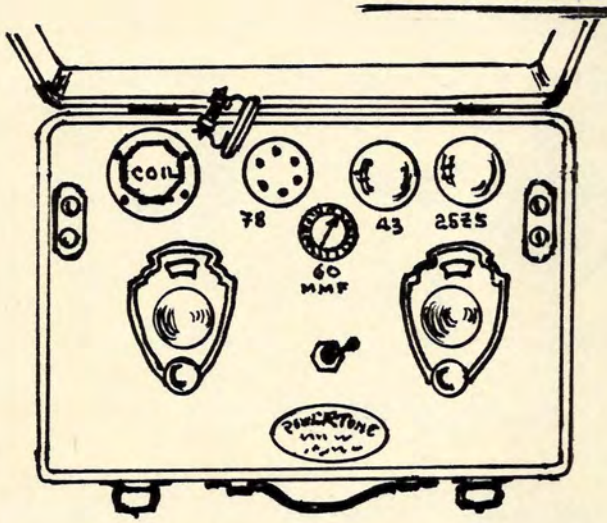

ANY COMMERCIAL 2-WINDING SW. COILS MAY BE USED: ORIGINAL COILS WERE TRY-MO, WHO KITTED THIS SET.

AC OR DC MAY BE USED.

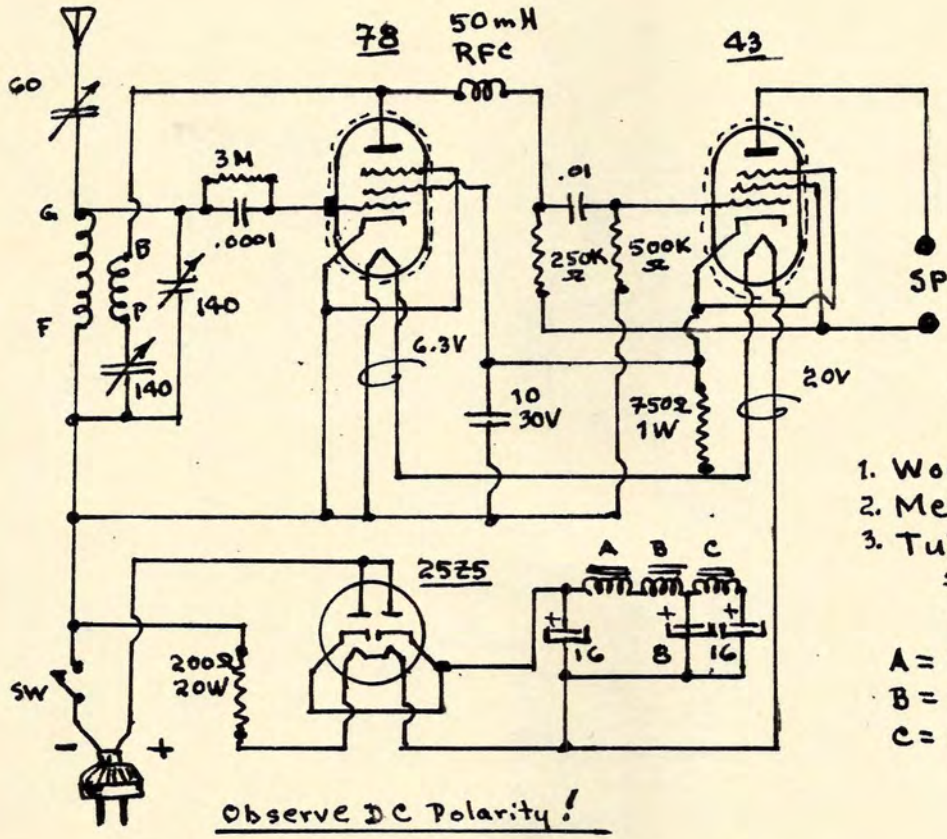

Observe DC Polarity!

NOTES

1. Wood Carrying Case.
2. Metal Chassis.
3. Tube Shields on 73 & 43 Tubes.

A = 150Ω
B = 150Ω
C = 150Ω
} 30H ea.

PRESSLEY-SANGAMO PORTABLE SUPER-HET, 1925

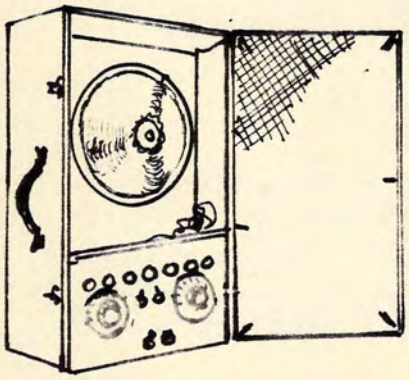

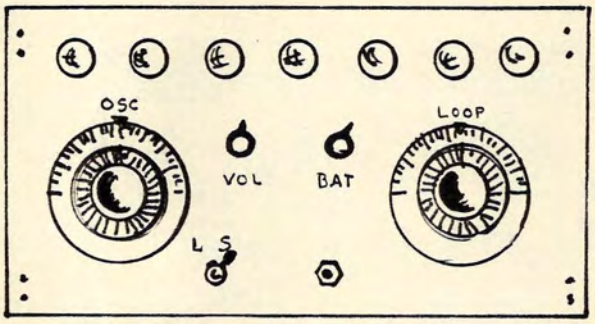

PANEL DETAILS

(2) REMLER TWIN-ROTOR VARIABLES.
99 TUBES.
CROSLEY "Musicone" SPEAKER

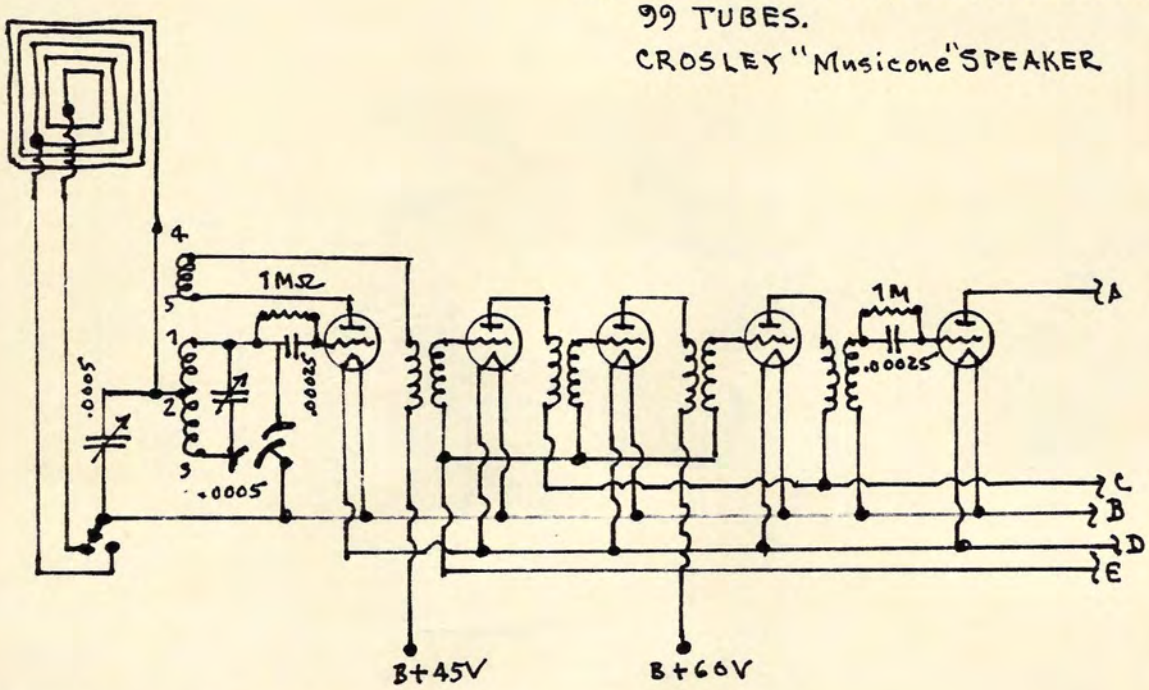

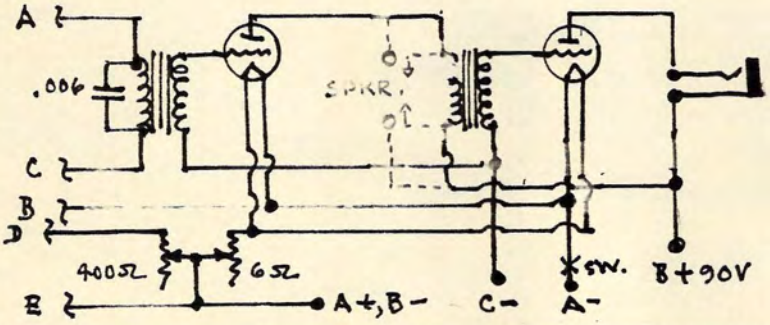

TOM THUMB PORTABLE, 1924

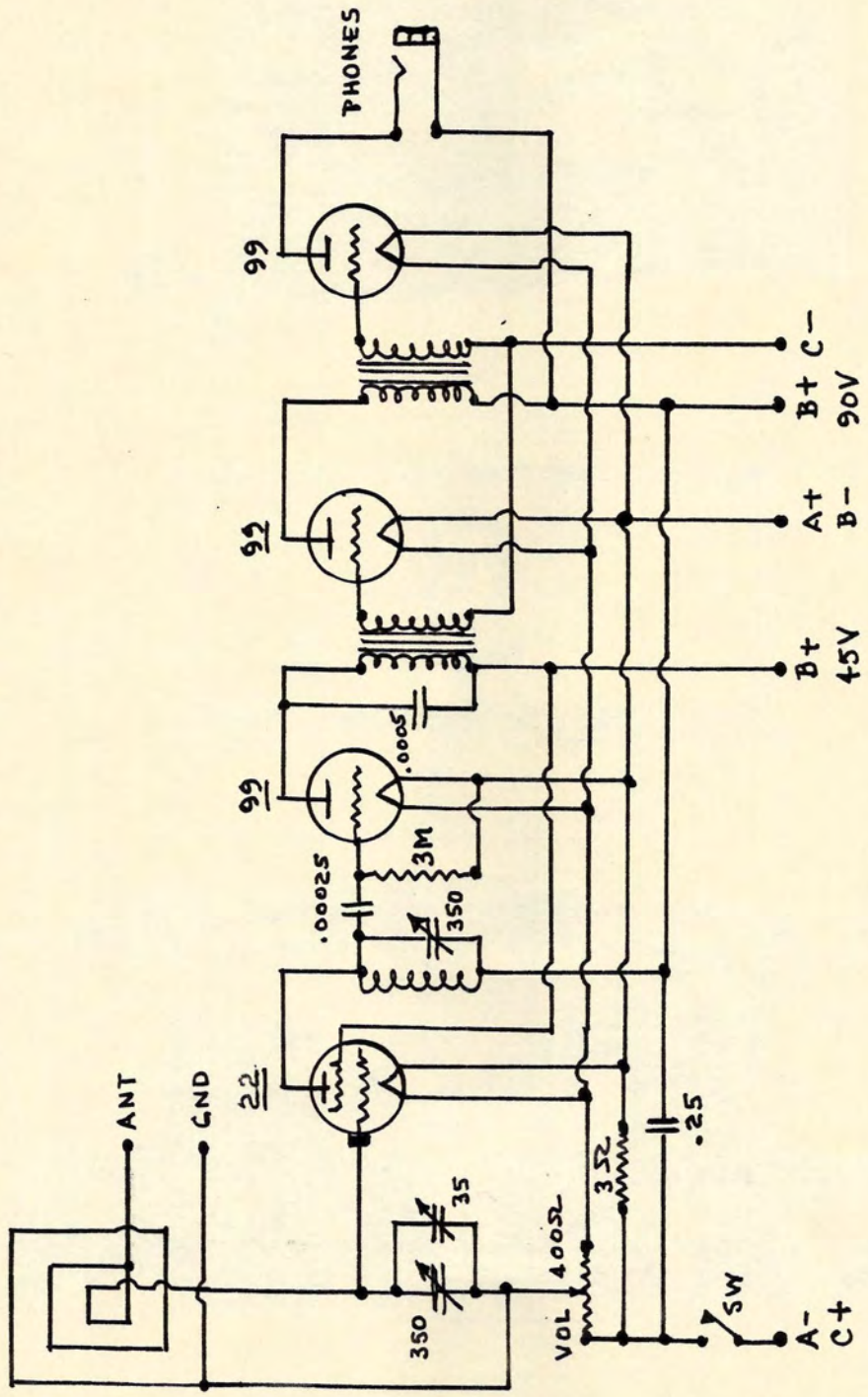

"POWERTONE" (BRUNO) RECEIVER, 1926/1927
(Sht. 1)

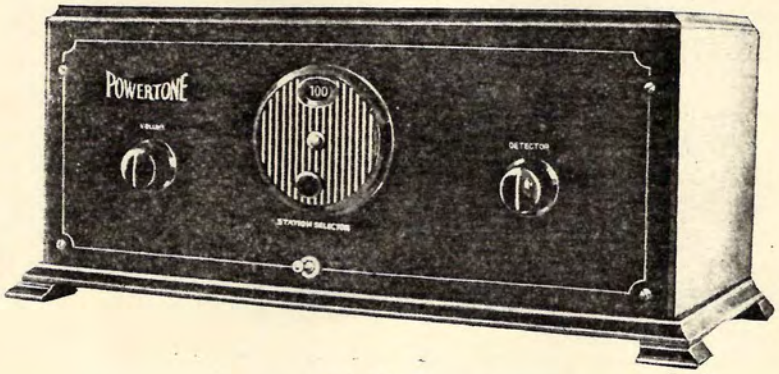

(1926)

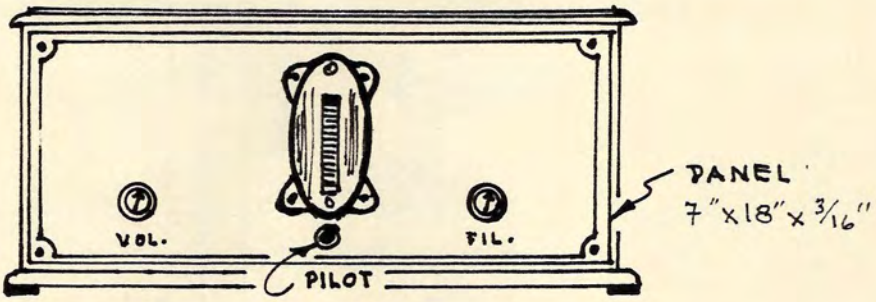

(1927)

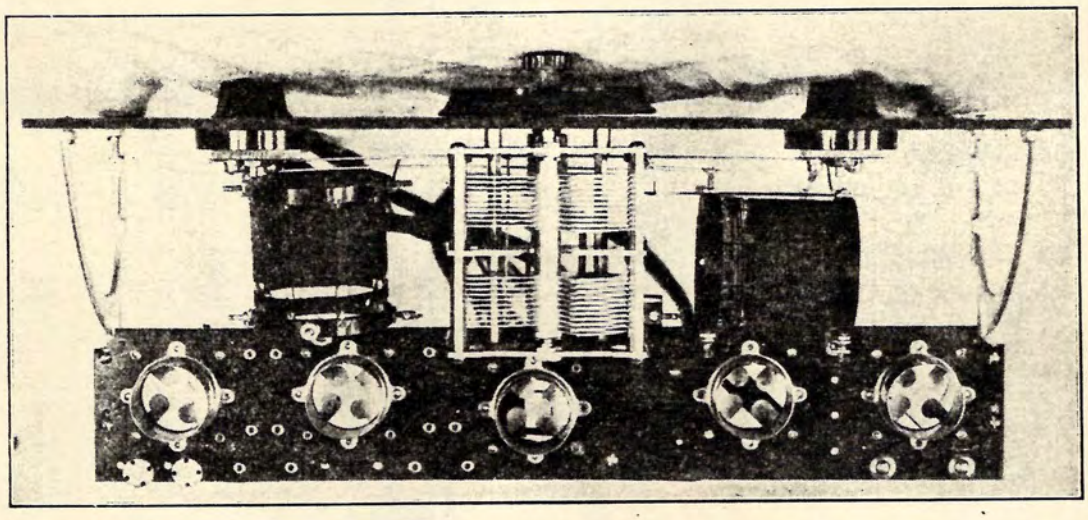

(SWC 11-36)
(RH 4-26)
(RW 8-20-27) (38)

BRUNO "POWERTONE" RCVR., 1926/1927;Sht.2

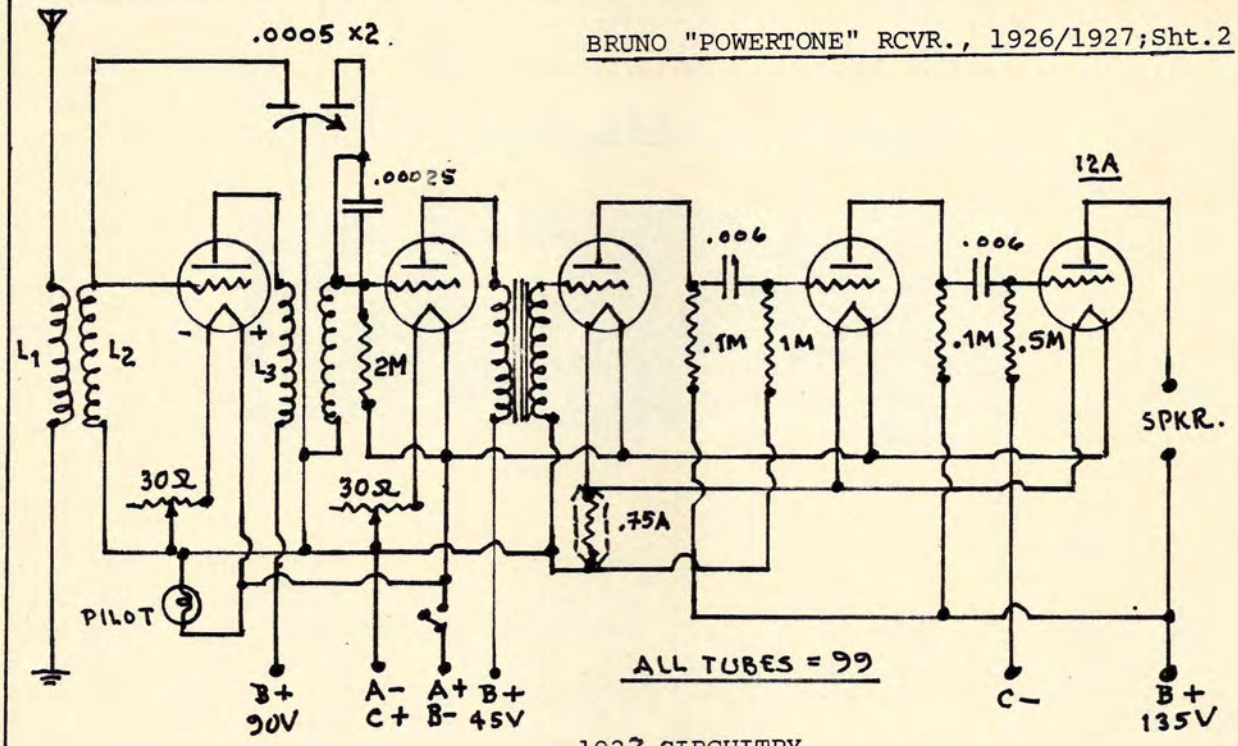

1927 CIRCUITRY

Coil Forms = 2½" Ø x 2" (Bruno #99 coil set used originally.)
Separation Between L1 & L2 = 3/8"; L3 & L4 separation = ¼".
L1 - 10T #24 DCC; L2 = 52T #24 DCC. L3 & L4 same.

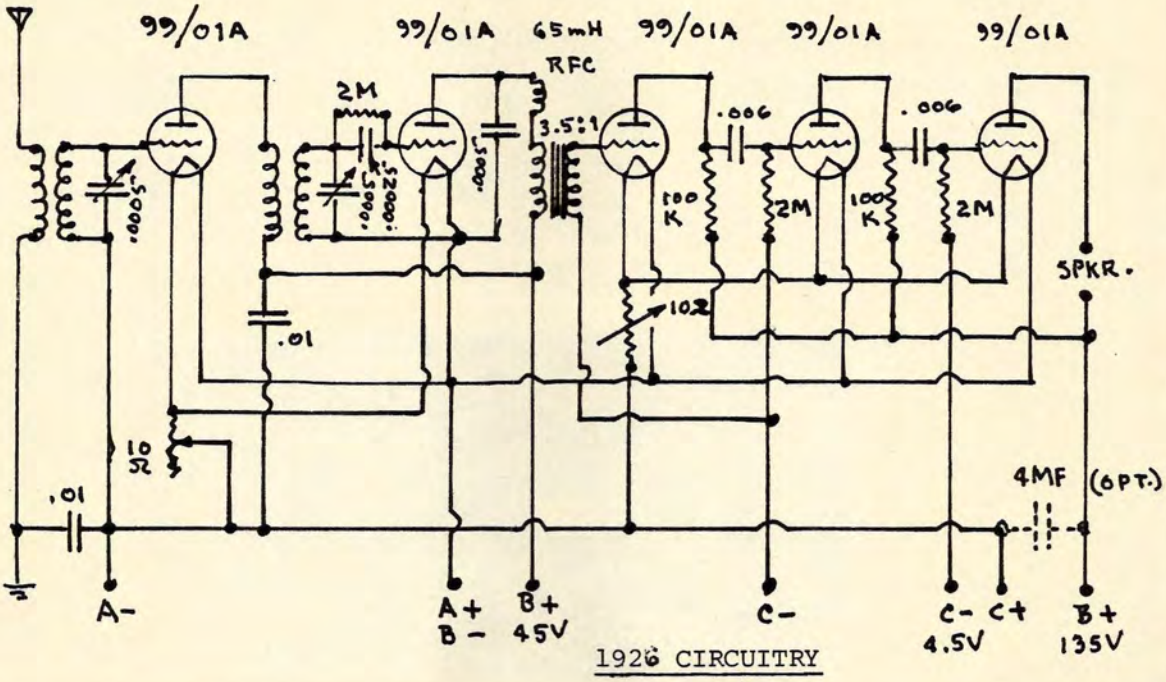

1926 CIRCUITRY

THE GEARHART - SCHLUETER SUPER-FIVE

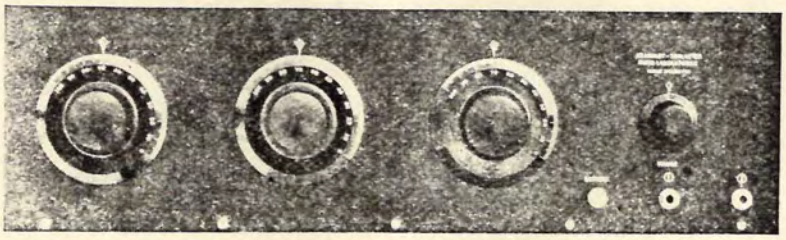

Messrs. Gearhart and Schlueter were notable for two things in the mid-Twenties: theyattacked the loudly and widespread touting in media of the virtues of the toroidal coil with reasonable scientific proof (which was never challenged, incidentally); and they designed a curious configuration of four hexagonal coils called "Quadraformers". The coils were quite efficient, and Kenneth Karkness, for example, was the first to adopt them for his reflex circuits. You will find details of the coil construction in Volume VII, and a brief essay on the RF amplifier controversy stirred up by Gearhart in Volume I.

As an aside, it might be mentioned that another oddity of the Gearhart-Schlueter Radio Company was the fact that they were located in Fresno, California - the raisin capitol of the world, and the Armenian capitol of America! The "Quadraformer" was offered in kitform and enjoyed a decent popularity for a couple of years. You will find all four versions in the following pages, an easily constructed receiver that works quite satisfactorily.

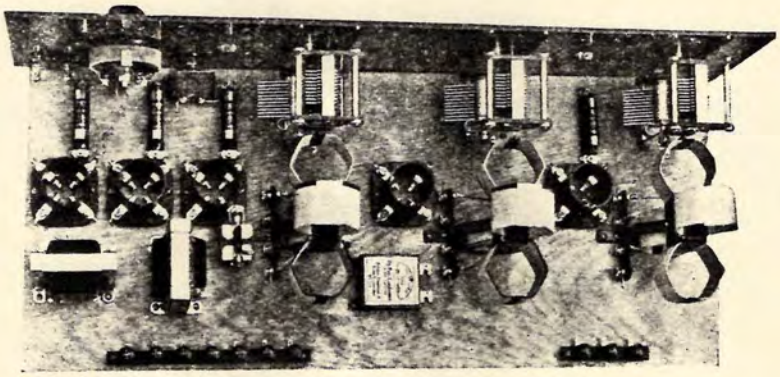

THE FIRST "QUADRAFORMER", 1925

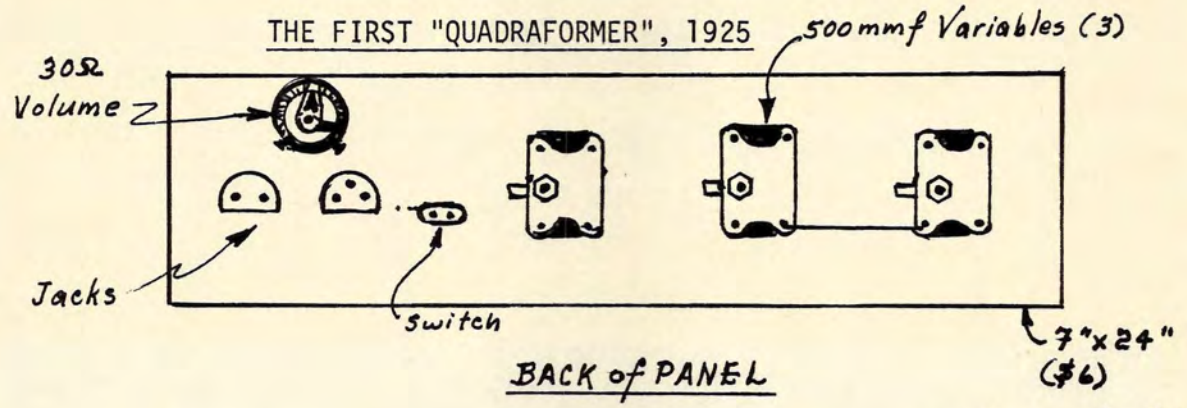

BACK of PANEL

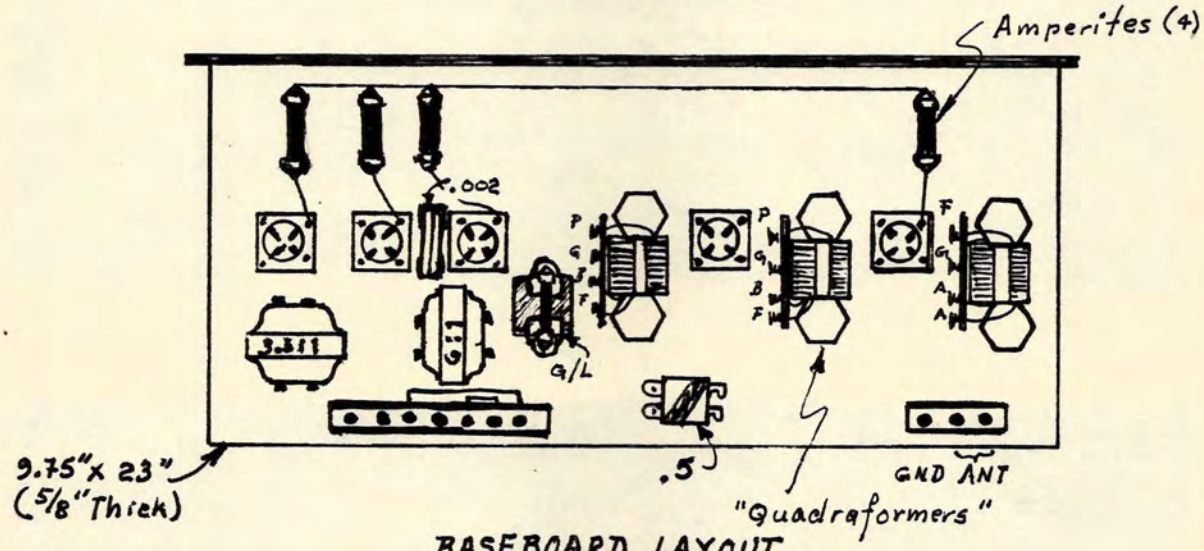

BASEBOARD LAYOUT

MAJOR PARTS LIST

"Quadraformer" Aerial Coupler
"Quadraformer" Inter-Stage Xfrmrs. (2).
Thordarson or Jefferson AF Xfrmrs.,
3.75:1 & 6:1.
Eby Binding Posts (10).
Amperites 1A or Brachstat "B" (4).
4" ⌀ Bakelite Dials (3).
Daven Grid-Leak Assembly.
Open Circuit Jack.
Closed Circuit Jack.
20' № 14 Buss-Bar, Tinned Copper Wire.

(G-SLit)

THE IMPROVED "QUADRAFORMER", 1925
(With Resistance-Coupled Audio Stage.)

The constants and values for this version of the "Quadraformer" are the same as the original version, the Daven R-C unit being substituted for the previous AF transformers. It's a matter of taste.

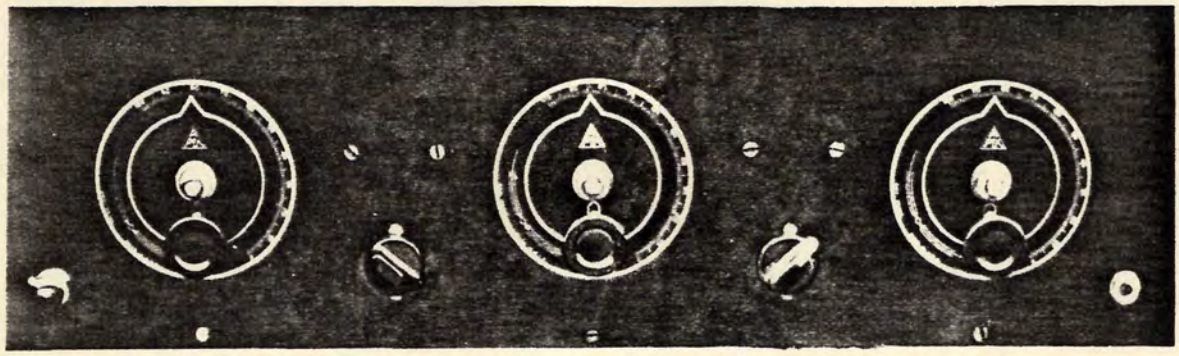

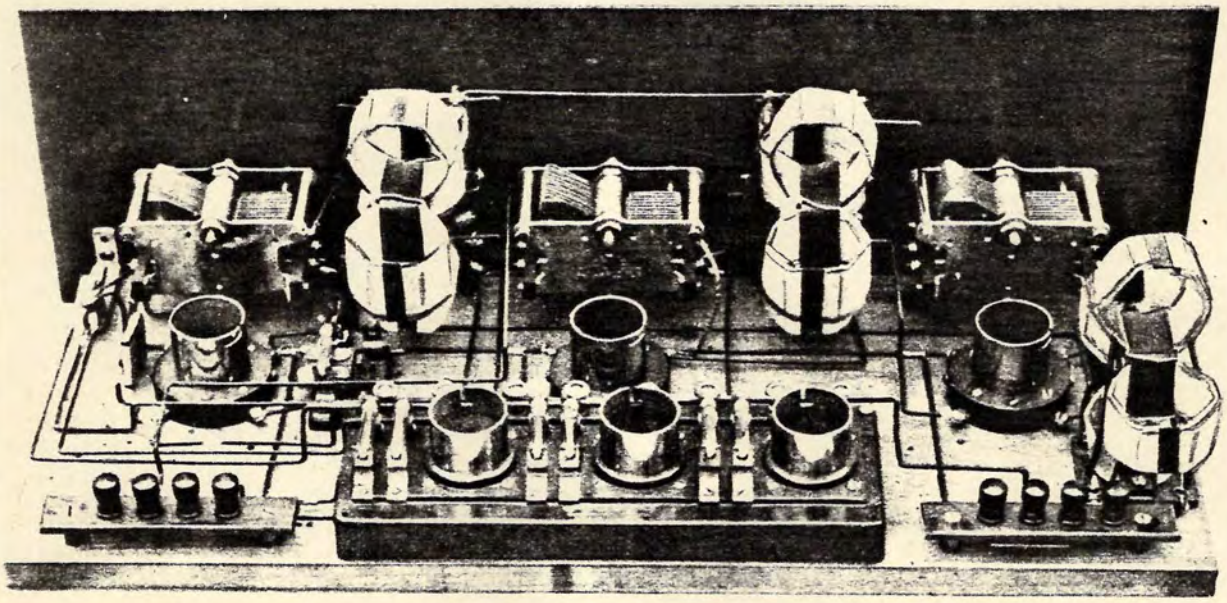

Quadraformer Receiver

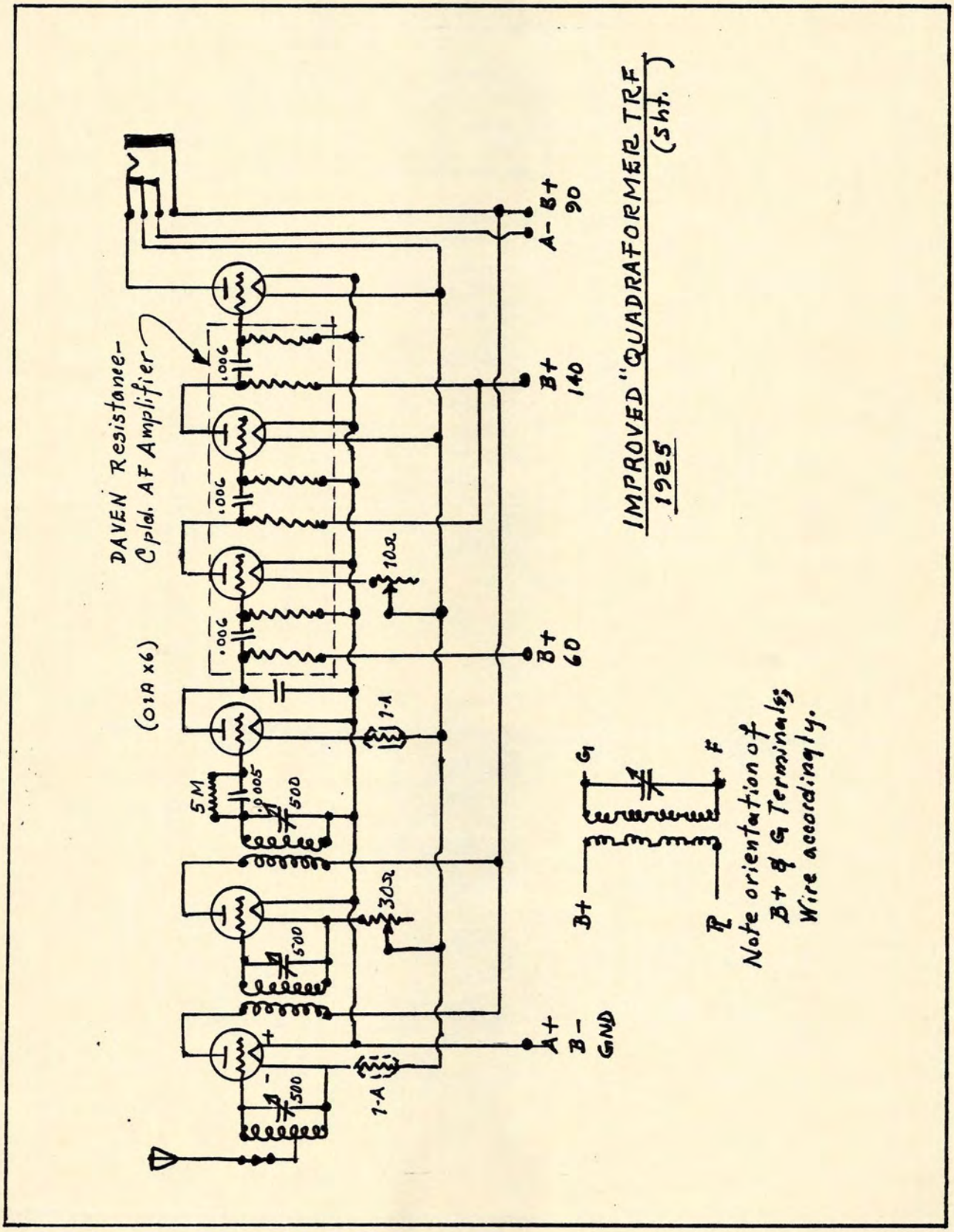
IMPROVED "QUADRAFORMER TRF
1925
(sht.)
DAVEN Resistance-Cpld. AF Amplifier
(01A x6)
A- B+ 90
B+ 140
B+ 60
A+ B- GND
.006
.006
.006
10Ω
1-A
5M
.0005
500
500
500
30Ω
1-A
G
F
B+
P
Note orientation of B+ & G Terminals Wire accordingly.

"QUADRAPHASE SUPEROLA" Receiver, 1925; Sht. 1

This set shows the employment of the QUADRAFORMER coils. The set was designed by Gearhart-Schleuter firm in Fresno, California. This set apparently was never popular, even though it was reported with usual enthusiasm by Radio In The Home. Harkness designed a circuit around the coils, but it found no favour with set-builders of the period.

Gearhart, himself, was constantly writing articles about the "NEW Quadraformer...Improvements in the Quadraformer...more Improvements in the Quadraformer...", etc., etc., but he was not very persuasive, for the coils and circuits employing them simply never got off the ground as the employment of the torodial coil was in the ascendency.

The QUADRAPHASE SUPEROLA was the first circuit to utilise as mandatory the then-new Rider "Phasatrol" - a clever device, and which in this circuit was properly employed. Its function is illustrated on page 241. There were a few differences in the SUPEROLA - the RF coil metal can acting as a shield was not grounded, and the rotors of the ganged variables were reversed, so that no two grids had adjacent condenser connexions. The logic of this, according to Gearhart, was that if all three of the grid connexions were in-line, then shielding would be needed. It was a fallacious notion that didn't prove out.

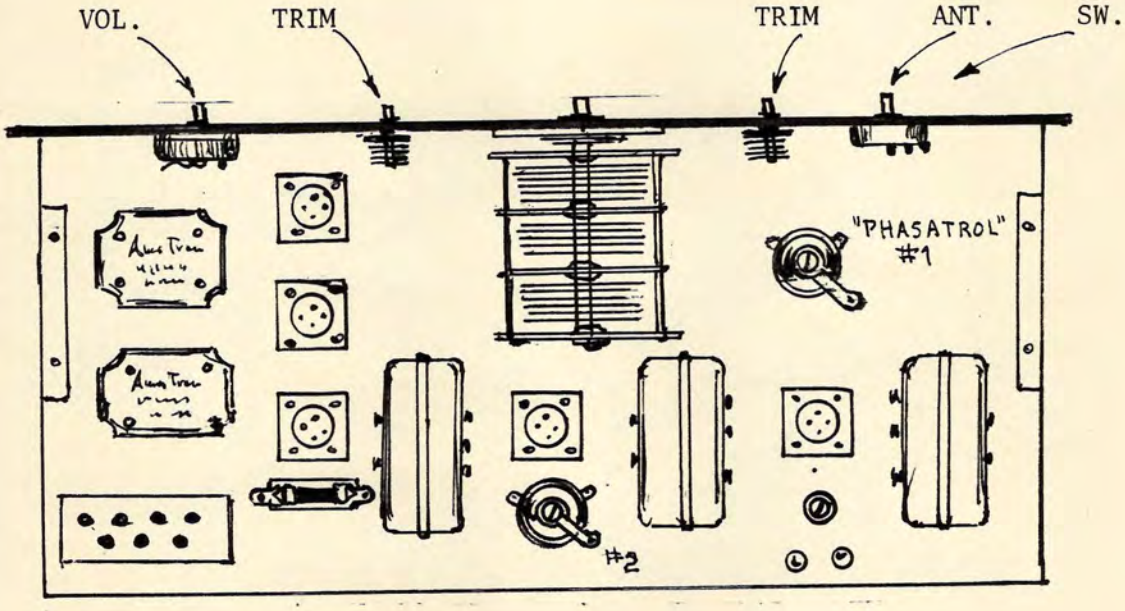

"QUADRAFORMER SUPEROLA" RECVR.:1927
(Sht. 2)

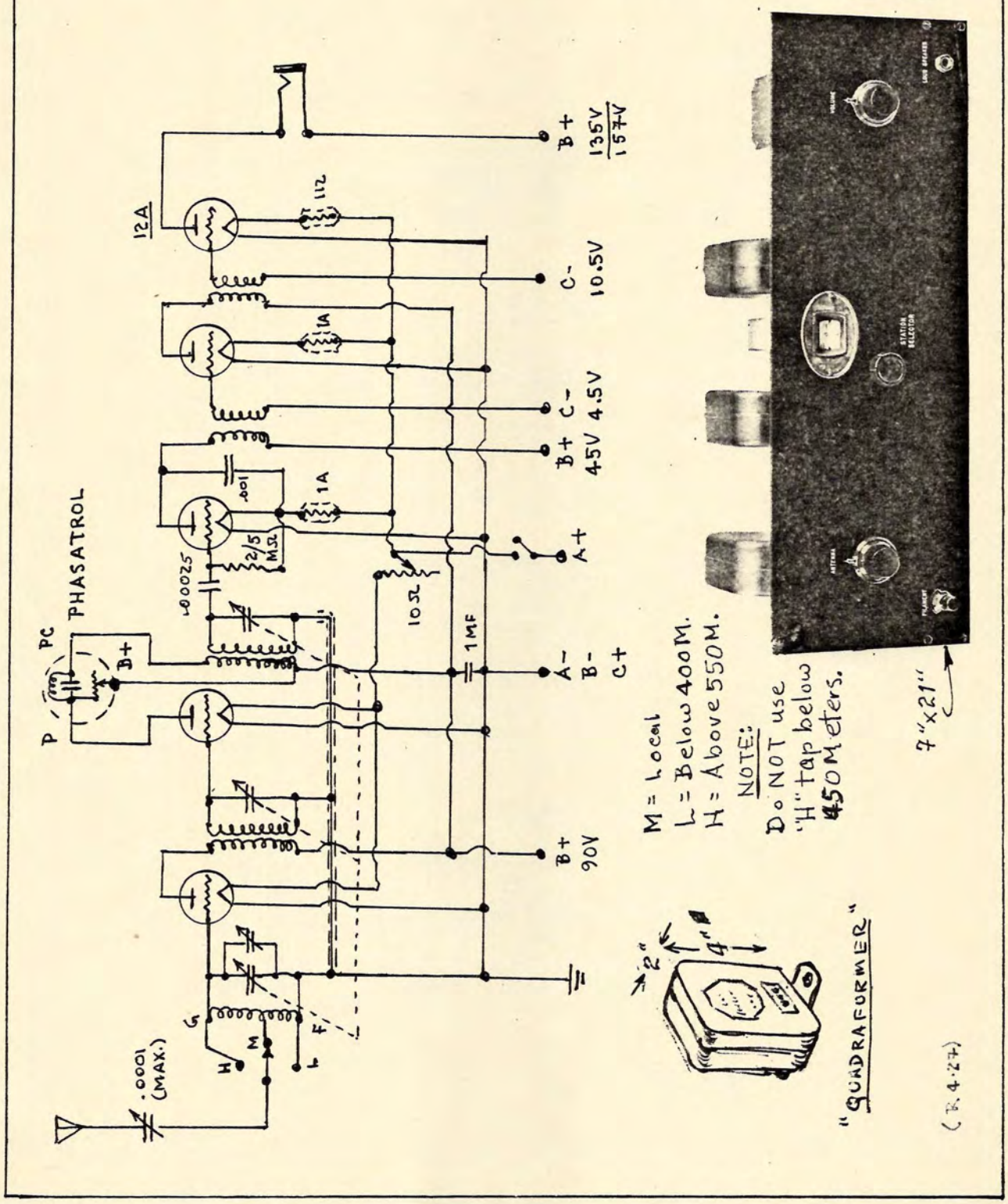

"QUADRAFORMER SUPEROLA" RCVR., 1927
(Sht. 3)

PHASATROL WIRING:

To "P" Terminal on 2nd RF Xfrmr.

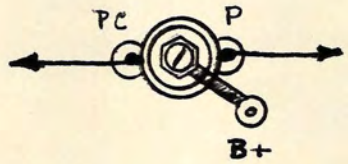

To Plate of 2nd RF Tube

GENERAL NOTES:

1. Note that rotors of the ganged variable are reversed from the usual order.

2. Do NOT ground RF shields.

3. A 300A DET may be used, substituting a 10-ohm resistor for the Amperite.

4. Set-Up: Turn Phasatrol screw fully CW.
   Adjust ANT variable full in.
   Trim variables for best signal.
   Set ANT variable half in.
   Adjust trimmers on variables for maximum signal.
   Open ANT variable until signallessens.
   Tune in another station, and adjust trimmers, if necessary.

5. Phasatrol Adjust:

   Tune in a station around 250 meters.
   Turn VOL up until oscillation occurs.
   Adjust Phasatrol screw until oscillation ceases - about 180°.
   Use a non-magnetic screw-driver.

"QUADRAFORMER SUPEROLA" RCVR., 1927
(Sht. 4)

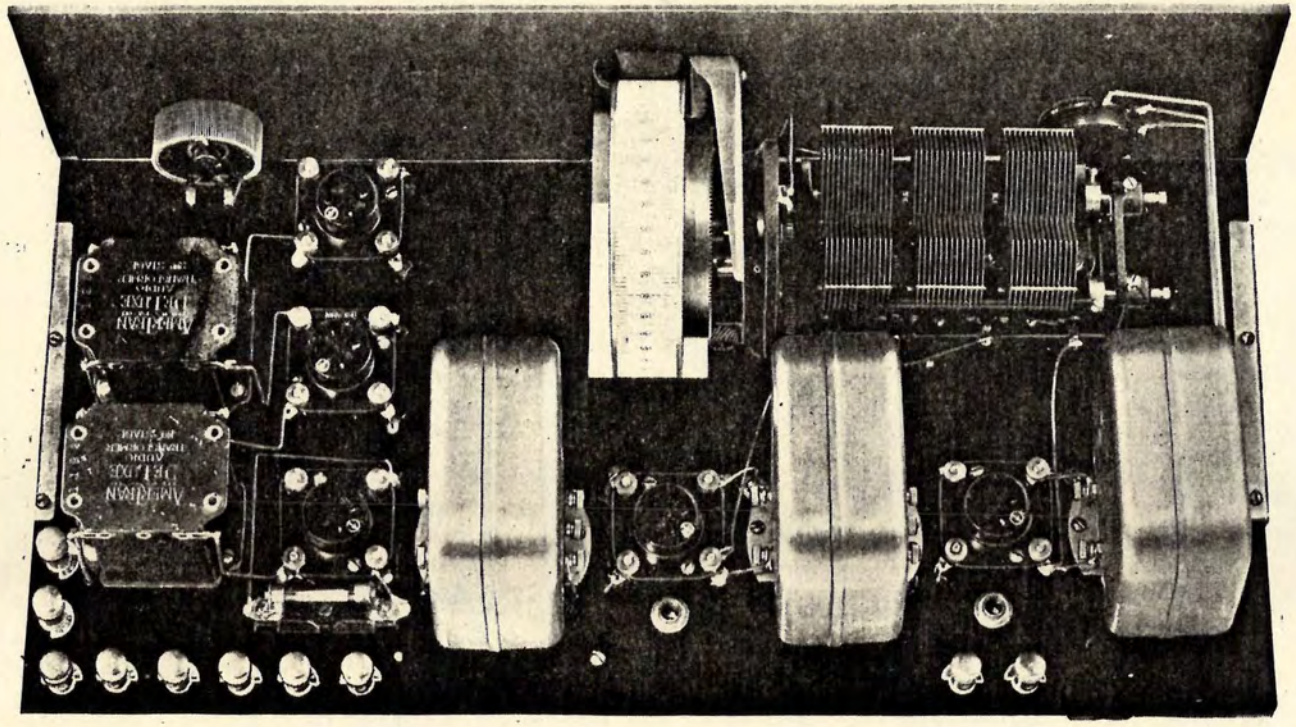

THE LAYOUT ABOVE IS A VARIATION OF THE ORIGINAL "QUADRAFORMER," MADE BY AN UNKNOWN HOME-CONSTRUCTOR. CIRCUITRY IS ESSENTIALLY THE SAME, AND AFTER I GOT IT WORKING PROPERLY, FOUND THAT ITS PERFORMANCE WAS NOT DIFFERENT FROM THE ORIGINAL.

"QUADRAFORMER VI", 1927; Sht. 1

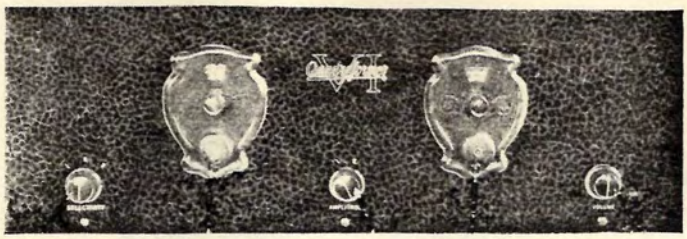

"SELECTIVITY" (S_1) "AMPLITROL" (S_2) VOL.

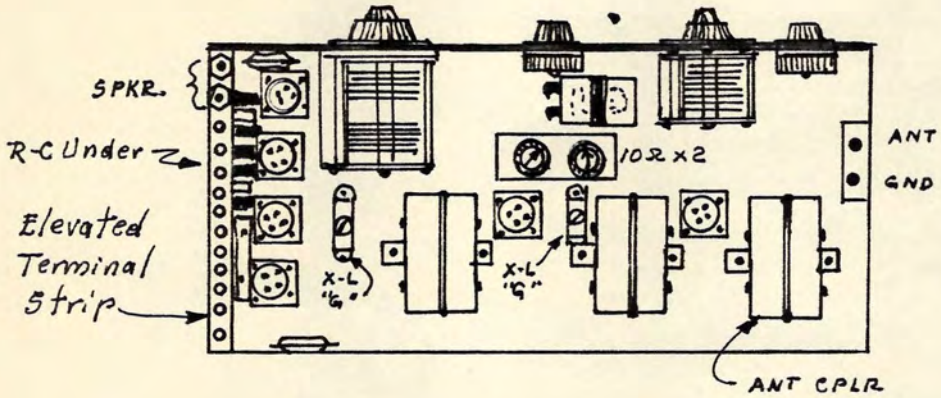

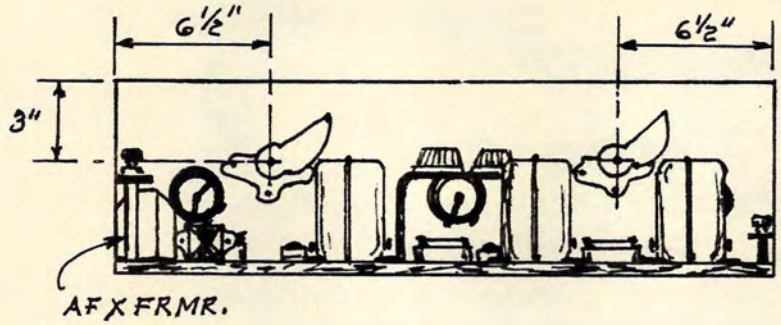

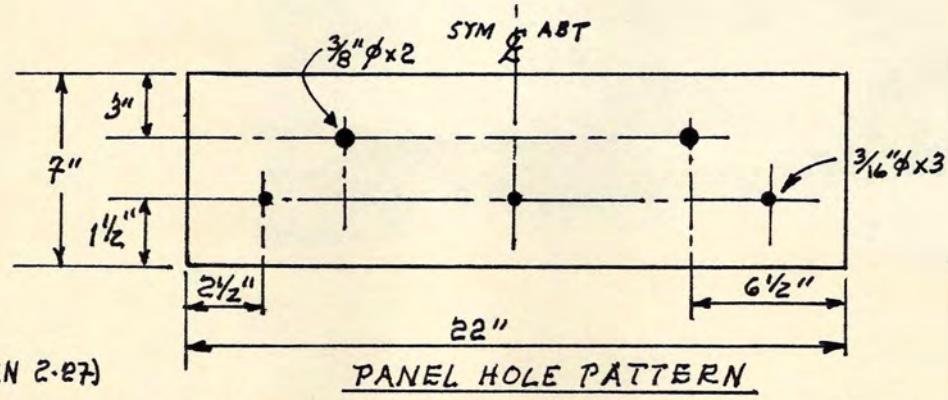

(RN 2-27) PANEL HOLE PATTERN

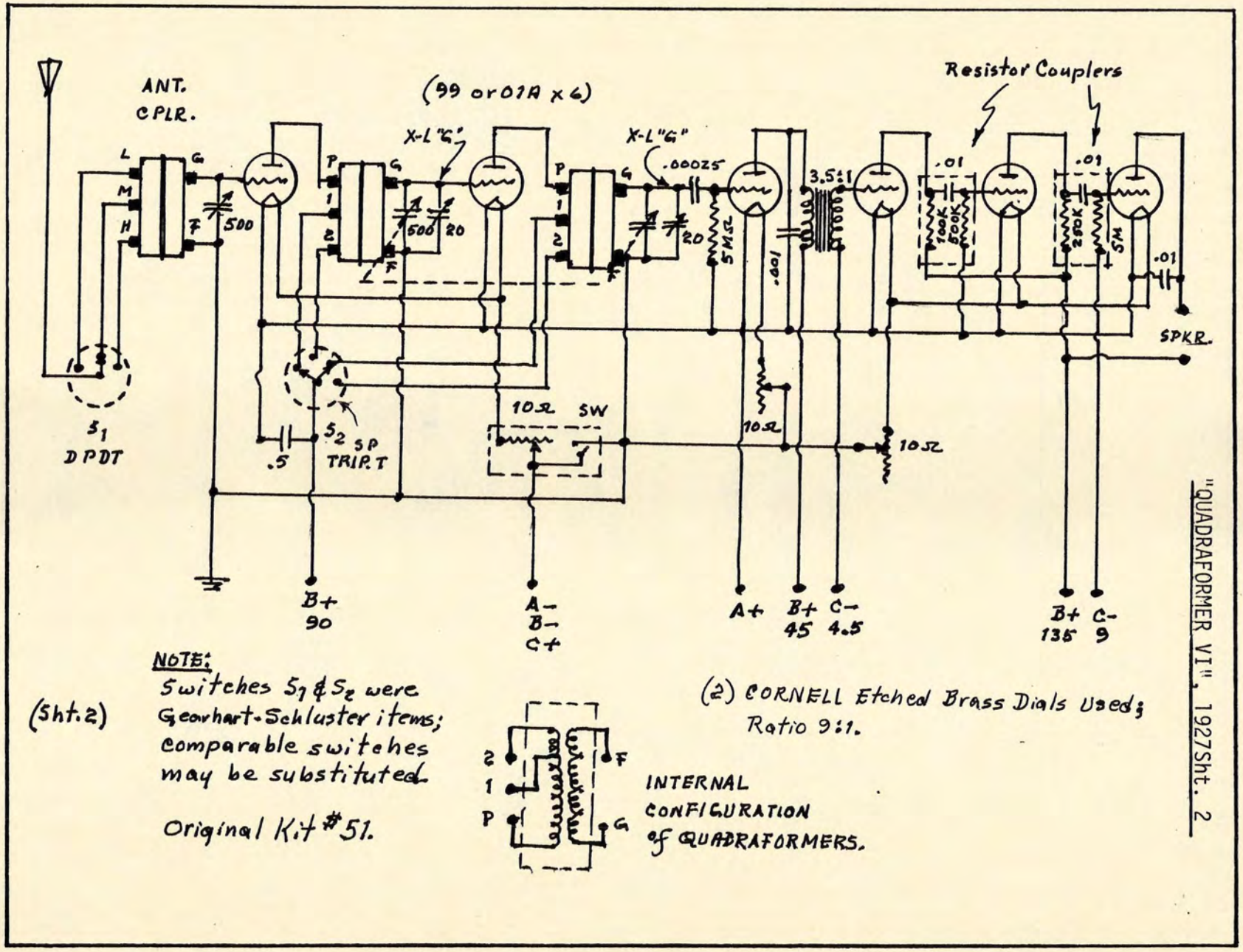

"QUADRAFORMER VI", 1927 Sht. 2

NOTE:
Switches S_1 & S_2 were Gearhart-Schluster items; comparable switches may be substituted.

(Sht. 2)

Original Kit #51.

(2) CORNELL Etched Brass Dials Used; Ratio 9:1.

INTERNAL CONFIGURATION of QUADRAFORMERS.

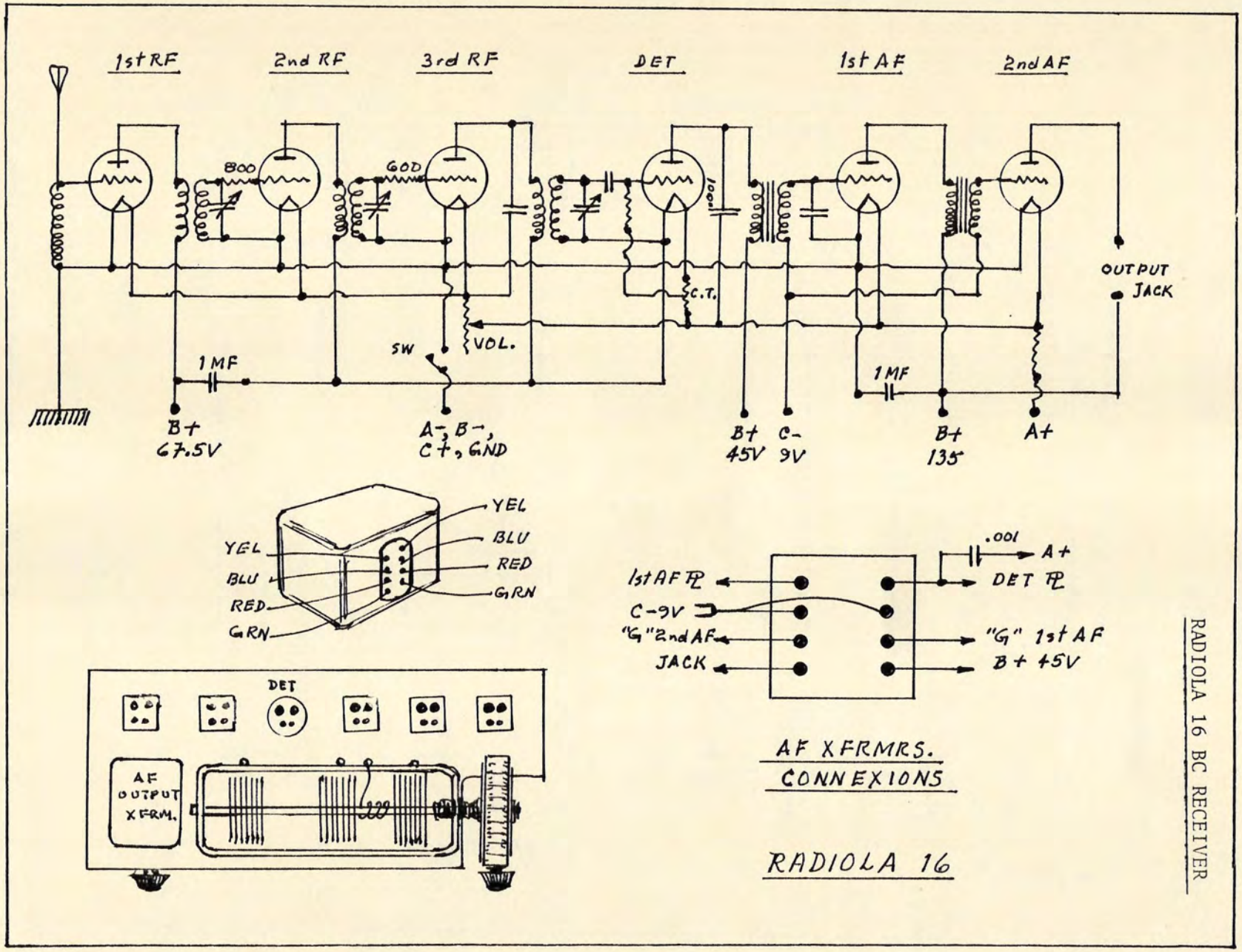

RADIOLA 16 BC RECEIVER

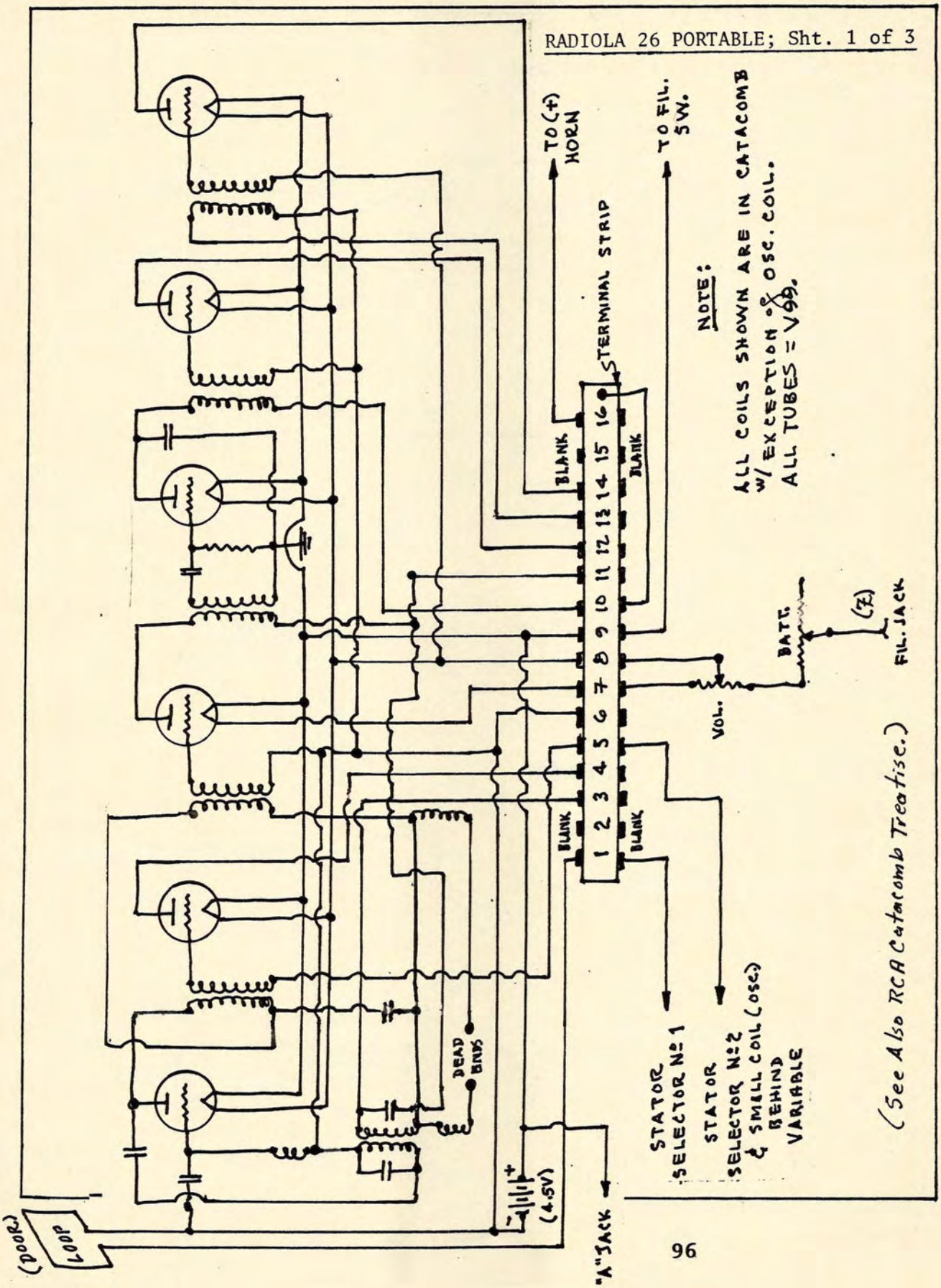
RADIOLA 26 PORTABLE; Sht. 1 of 3
TO (+) HORN
TO FIL. SW.
TERMINAL STRIP
BLANK
BLANK
BLANK
BLANK
1 2 3 4 5 6 7 8 9 10 11 12 13 14 15 16
NOTE:
ALL COILS SHOWN ARE IN CATACOMB w/ EXCEPTION of OSC. COIL.
ALL TUBES = V99.
VOL.
BATT.
(Z)
FIL. JACK
(See Also RCA Catacomb Treatise.)
STATOR SELECTOR No 1
STATOR SELECTOR No 2 & SMALL COIL (OSC.) BEHIND VARIABLE
DEAD BNDS
(4.5V)
"A" JACK
LOOP
(POOR)

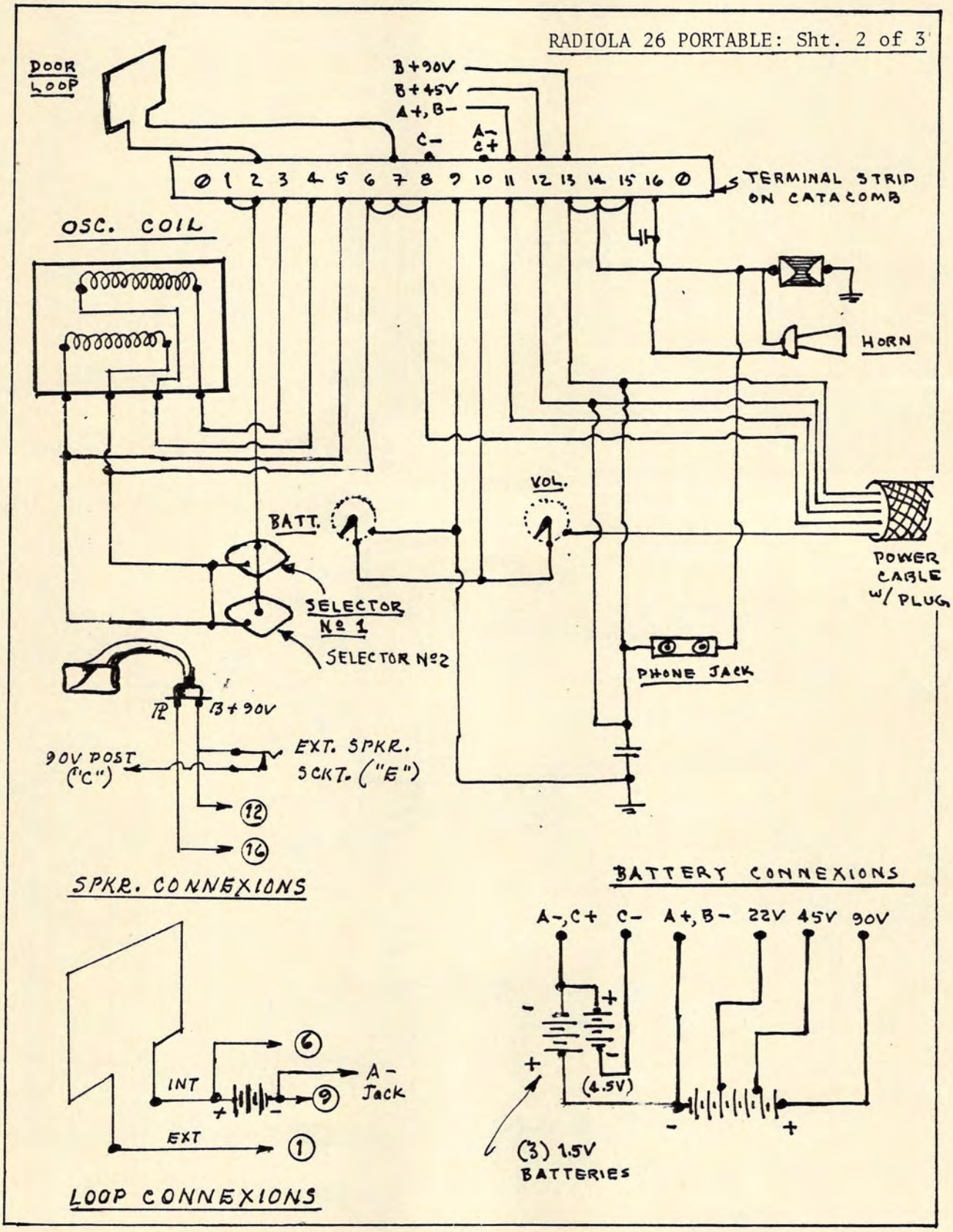
RADIOLA 26 PORTABLE: Sht. 2 of 3
DOOR LOOP
B+90V
B+45V
A+, B-
C-
A- C+
0 1 2 3 4 5 6 7 8 9 10 11 12 13 14 15 16 0
TERMINAL STRIP ON CATACOMB
OSC. COIL
HORN
VOL.
BATT.
POWER CABLE W/ PLUG
SELECTOR Nº 1
SELECTOR Nº2
PHONE JACK
B+90V
90V POST ("C")
EXT. SPKR. SCKT. ("E")
12
16
SPKR. CONNEXIONS
BATTERY CONNEXIONS
A-, C+
C-
A+, B-
22V
45V
90V
(4.5V)
(3) 1.5V BATTERIES
6
INT
A- Jack
9
EXT
1
LOOP CONNEXIONS

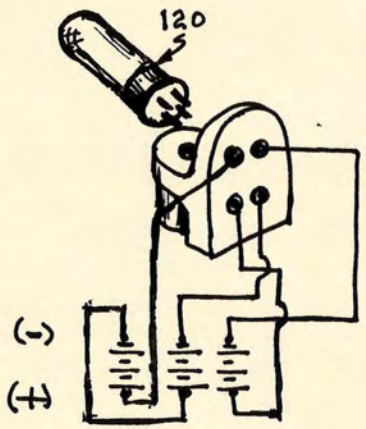

(3) 22.5V "C" BATTERIES
UR-556 ADAPTER WAS AVAILABLE FOR 120 TUBE IN LAST STAGE.

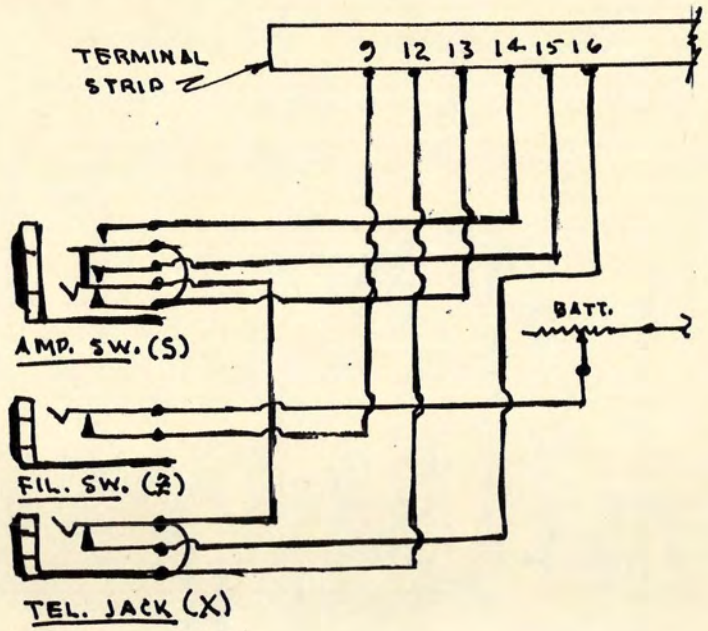

NOTES

1. RADIOLA 26 CATACOMB CONNEXIONS ARE REVERSED FROM ALL OTHER RCA 6-TUBE CATACOMBS! Do Not attempt to interchange them.

2. Horn spekaer is at all times connected to 2nd AF stage.

3. Phone-tip pin jacks are connected to 1st AF stage.

4. No stage-change switch was employed.

RADIOLA 26 PORTABLE: Sht. 3 of 3

RADIOLA VI, Model AR-895; Sht. 1

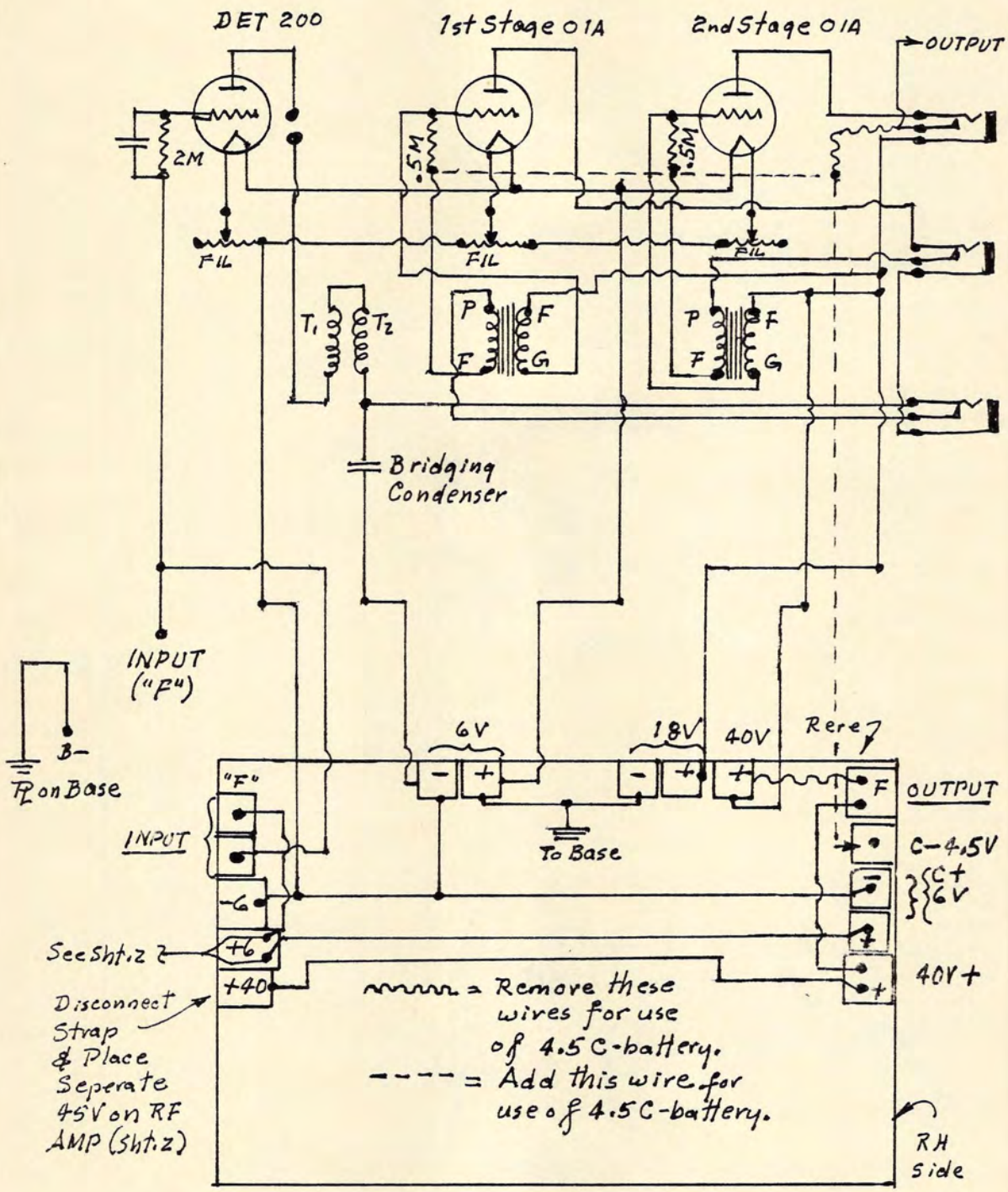

PLAN VIEW (Showing Terminals)
(AA-1400)

(RCA Vol-I)

RADIOLA VI, Model 895; Sht. 2

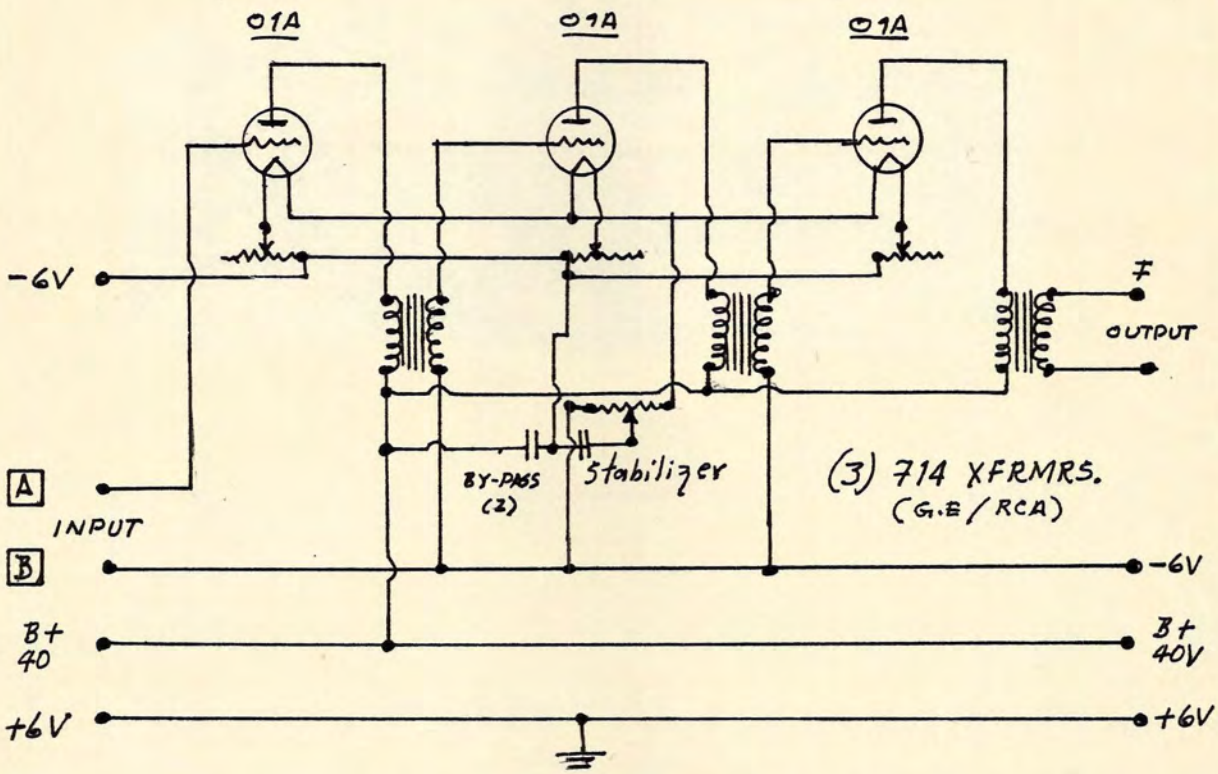

3-STAGE RF AMPLIFIER UNIT for RADIOLA VI (AA-1520)

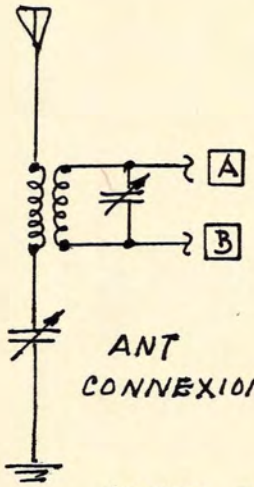

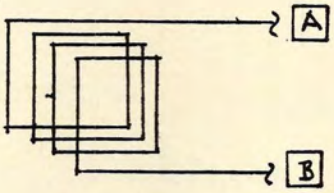

01A TP voltage = 45V

NOTE: DET 200 TP voltage = 18V } Unit AA-1400
AF 201A voltage = 90V } (See Sht. 1)

Pull lower left knob out for 200 to 500 meters.
Push in lower left knob for 500 to 5000 meters.

RCA "CATACOMB NOTOTIONS" SUPER-HETERODYNE & VIII; 1926 (Sht. 1)

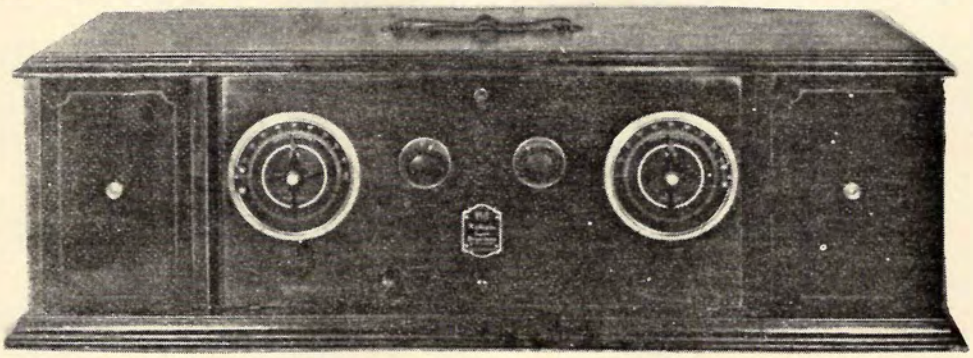

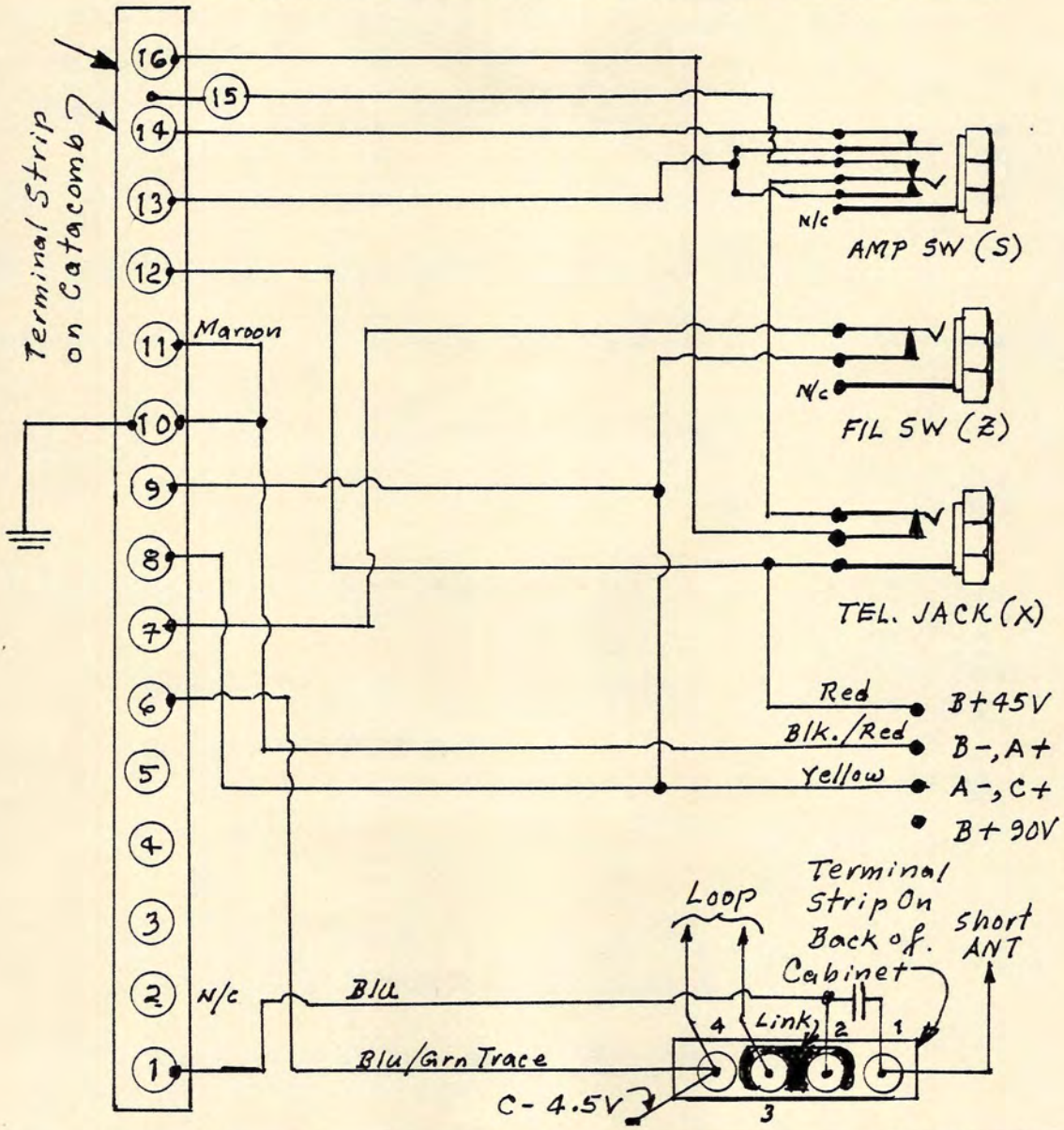

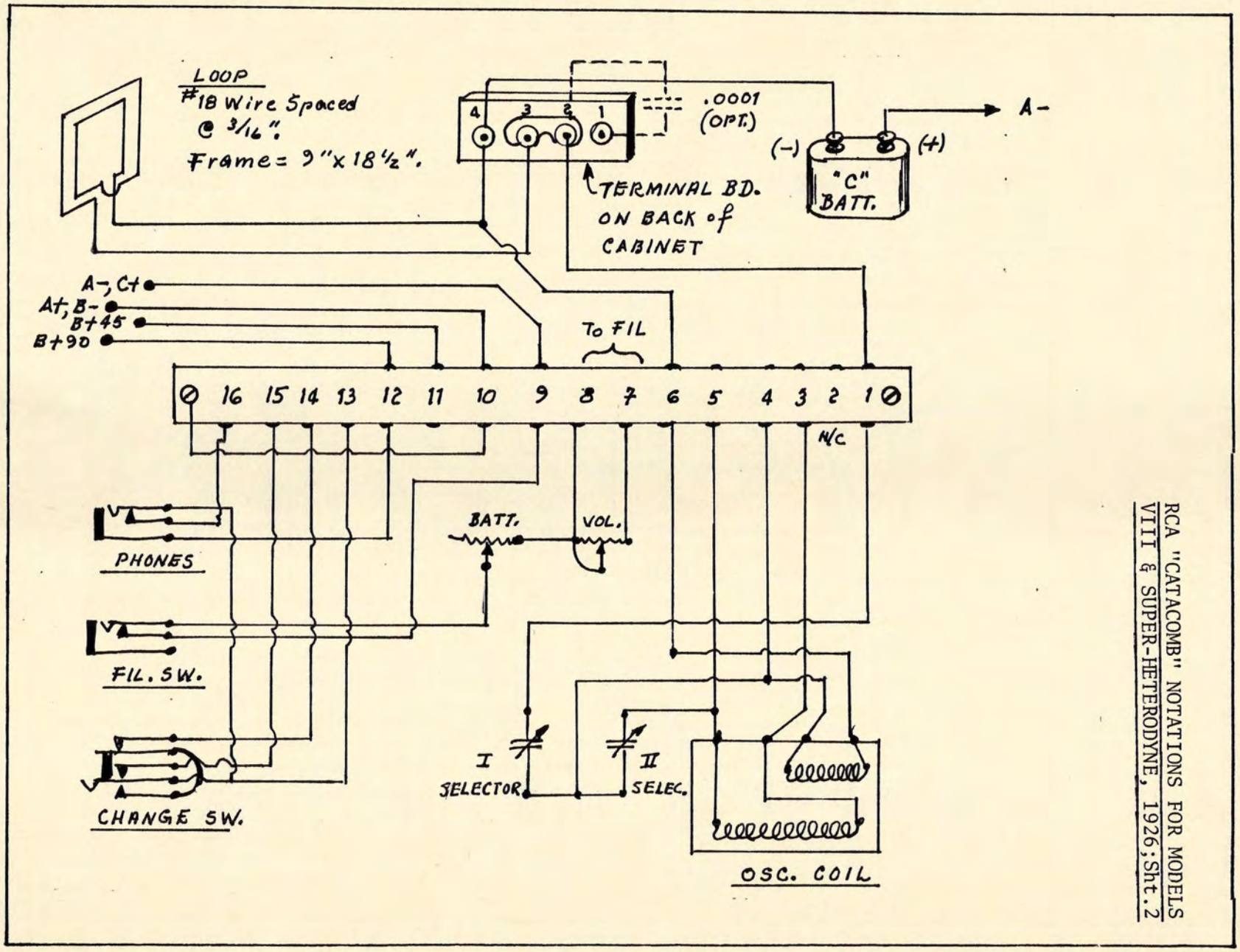

RCA "CATACOMB" NOTATIONS FOR MODELS VIII & SUPER-HETERODYNE, 1926; Sht.2

RADIOLA SUPER-HETERODYNE, 1926; (Sht. 1)

NOTE: Also applicable to RCA Model VIII (AR-810) & AR-812. Both used the same catacomb.

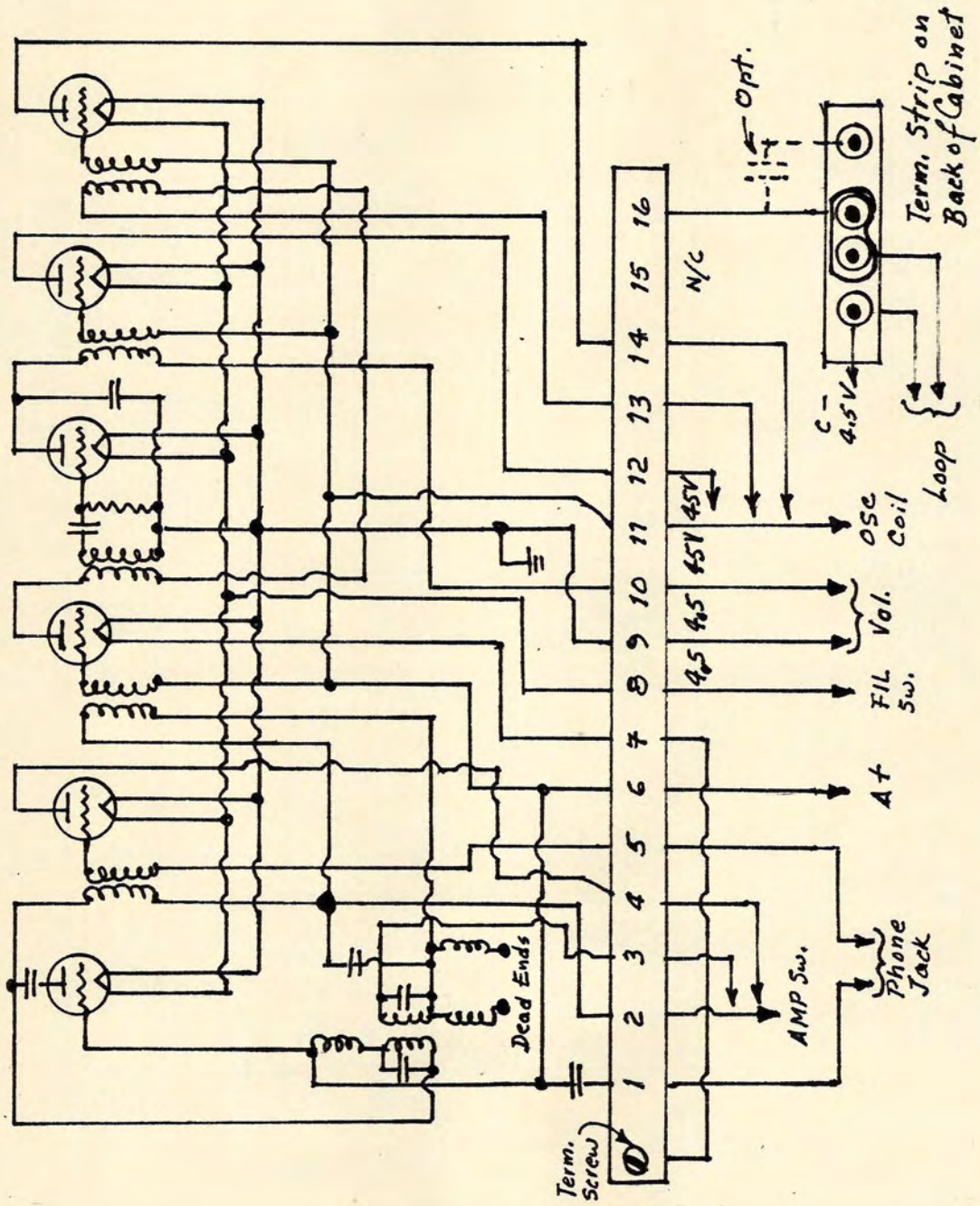

RADIOLA SUPER-HETERODYNE, 1926; Sht. 2

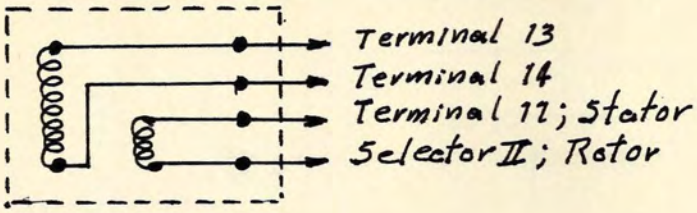

OSC COIL DET.

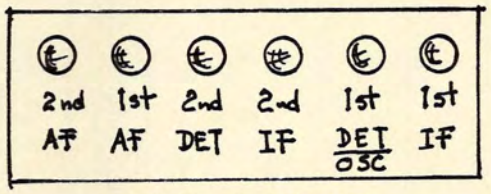

TUBE LAYOUT

NOTES: 1. A standard RF xfrmr. may be used instead of a loop. ANT and GND connected to PRI; SEC to Posts 2 and 4 on Terminal Board. Link should be open. Xfrmr. should be for a .0005 MFD variable. Connecting Post 1 to ground will sometimes help.

2. See RADIO-CRAFT, April, 1930, for Data Sheet.

3. Circuit uses the 2nd Harmonic:

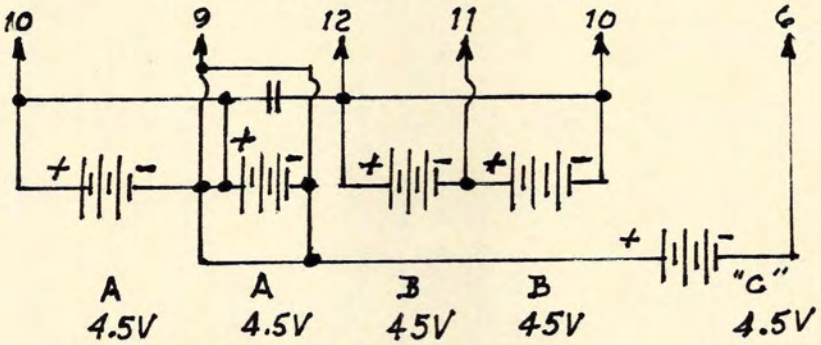

9V "A Supply required.
The .006 cap. may be replaced with 1 or 2 MF.
Posts 9 and 16 do not connect to catacomb.
Terminal board is on back of cabinet, inside.

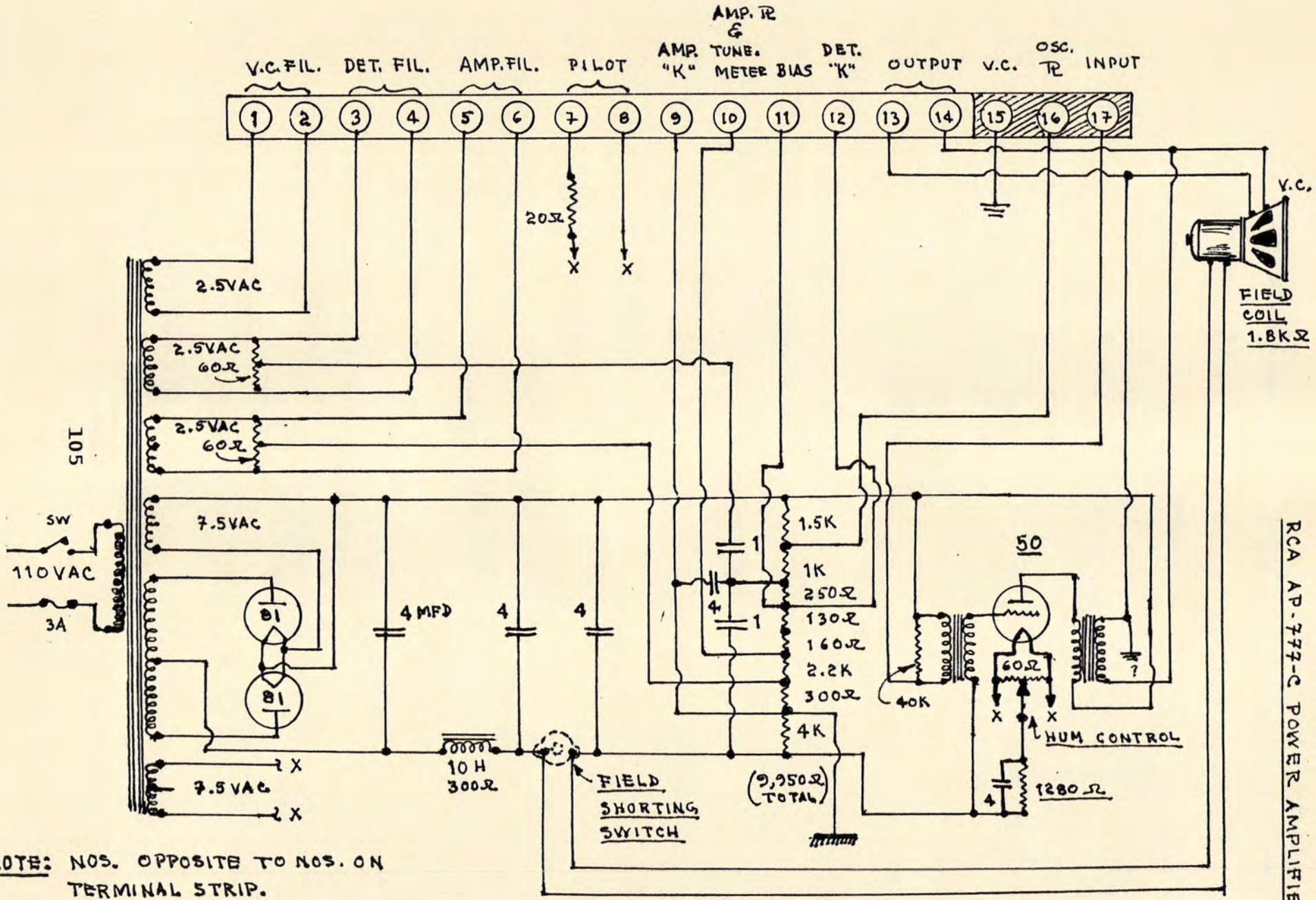

NOTE: NOS. OPPOSITE TO NOS. ON TERMINAL STRIP.

RCA AP-777-C POWER AMPLIFIER

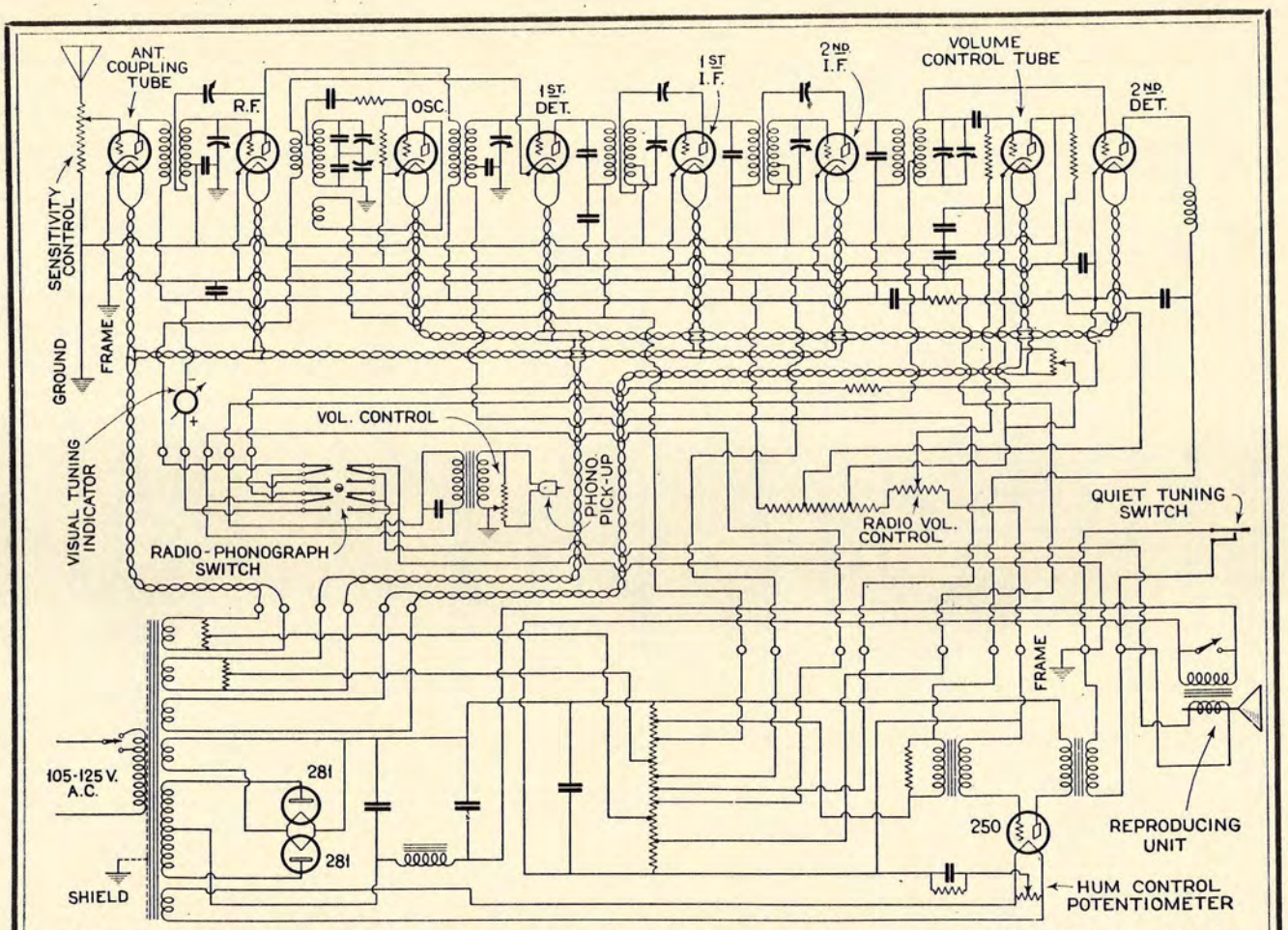

Schematic diagram of the Radiola 64, which is a combination radio and phonograph. The notable features are: automatic volume control; a visual tuning indicator in the form of a milllammeter in the plate circuit of the volume control tube; a power detector, feeding directly into the 250 tube; an untuned input circuit and lastly, a quiet tuning switch. Note that only the heater-type tubes are used in the receiver circuit, which, incidently, is fundamentally the same as the Radiola 60 superhetrodyne.

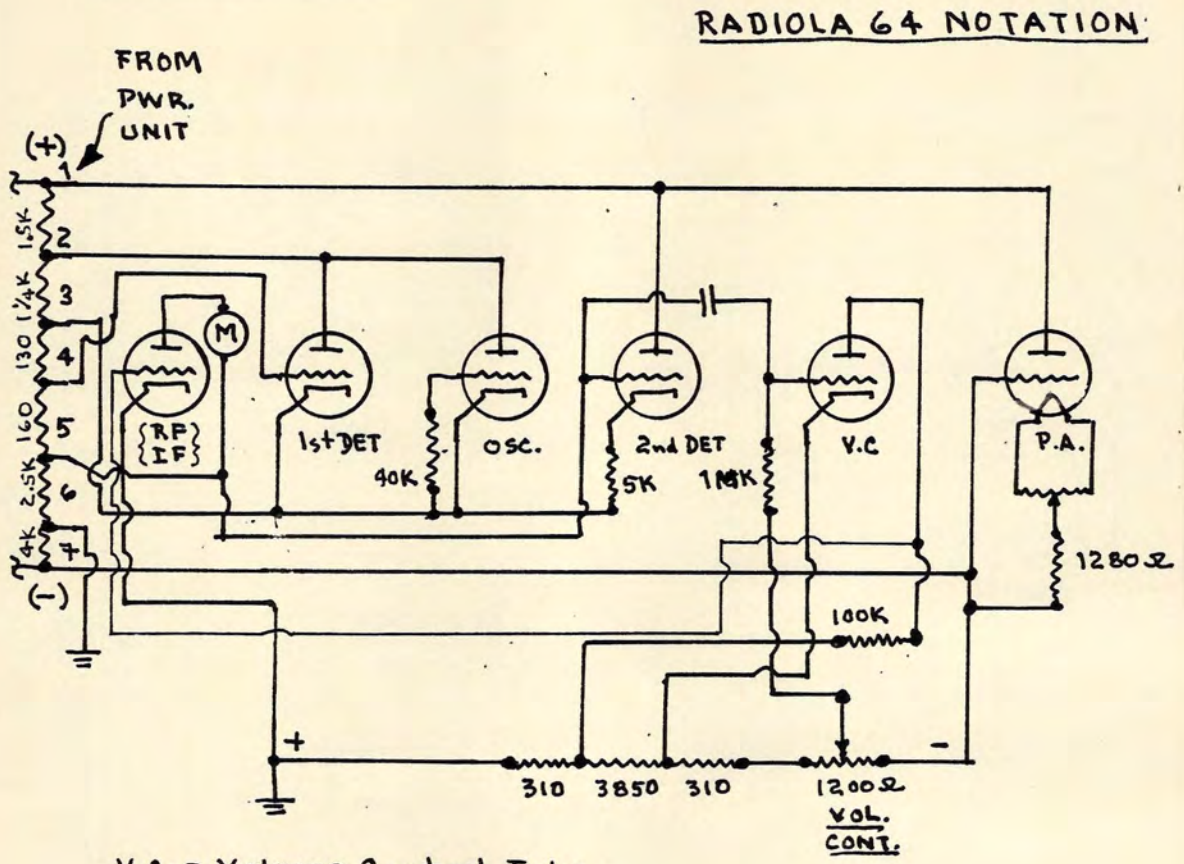

V.C. = Volume Control Tube.
M = Meter.
P.A. = Power Amplifier Tube.

(RF & IF TUBES SHOWN AS ONE TUBE. SEE ALSO PAGE 252.)

There were two variants of the Radiola 64 circuit, different enough to where they were not interchangeable. This format will not permit detailed schematics, so if you are restoring a Radiola 64, either table, console, or phonograph-combination, write to The Editorial Group, Ltd., and a large scale schematic will be sent to you. The Electrola Model 764 is also the Radiola 64.

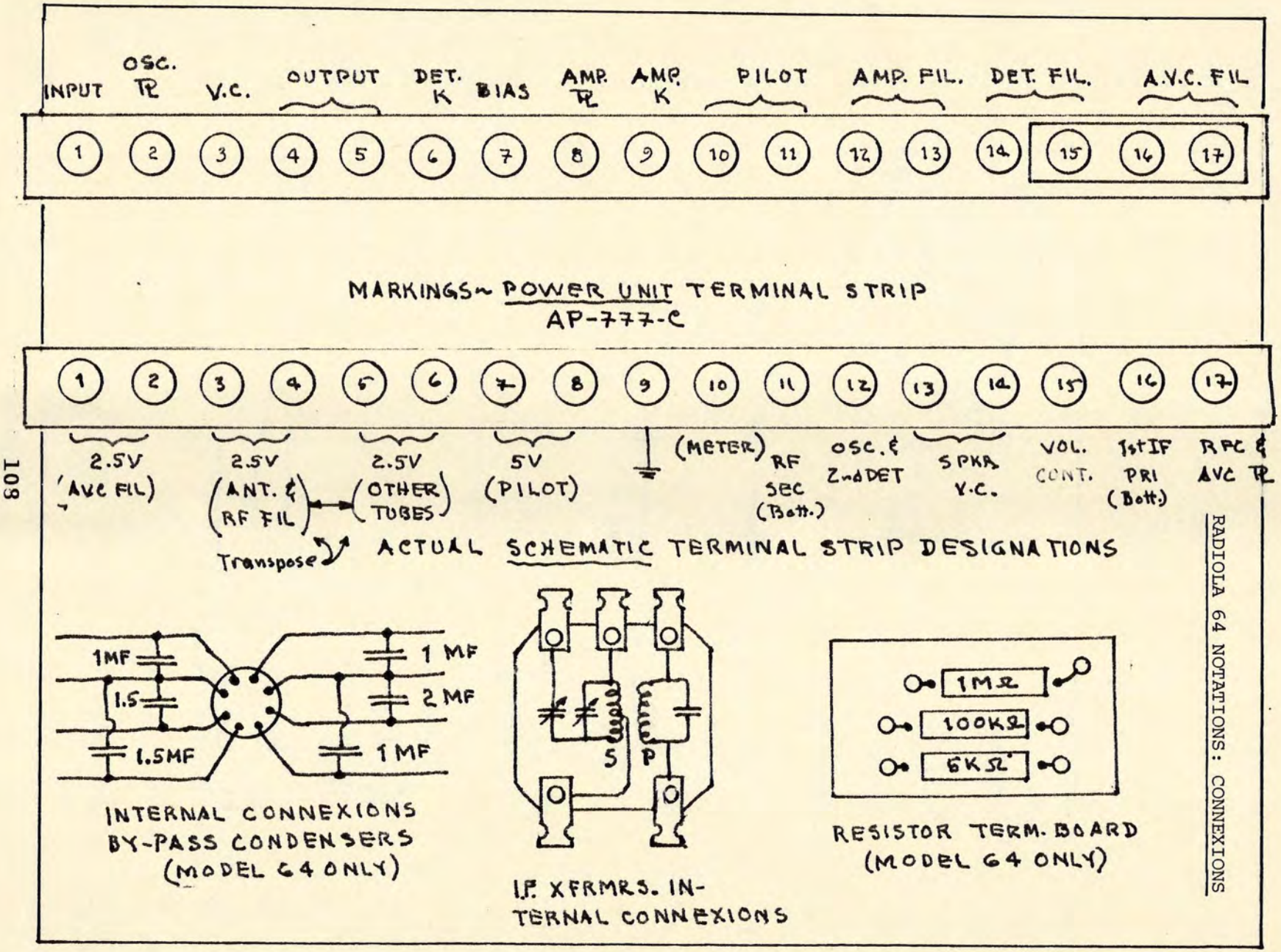

RADIOLA 64 NOTATIONS: CONNEXIONS

(RCA) POCKET PORTABLE, 1940

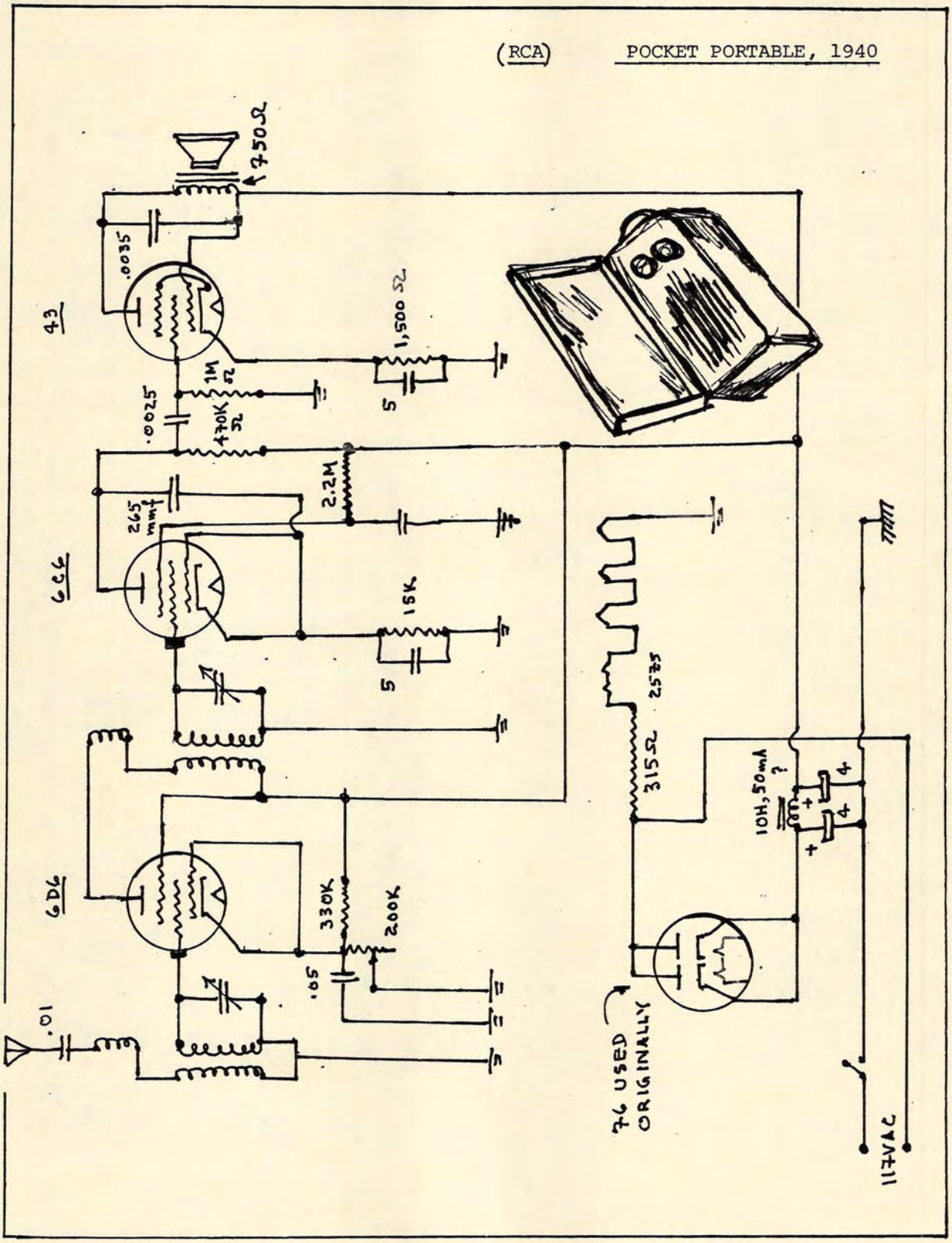

RAULAND "ALL-AMERICAN" UNITS, 1924

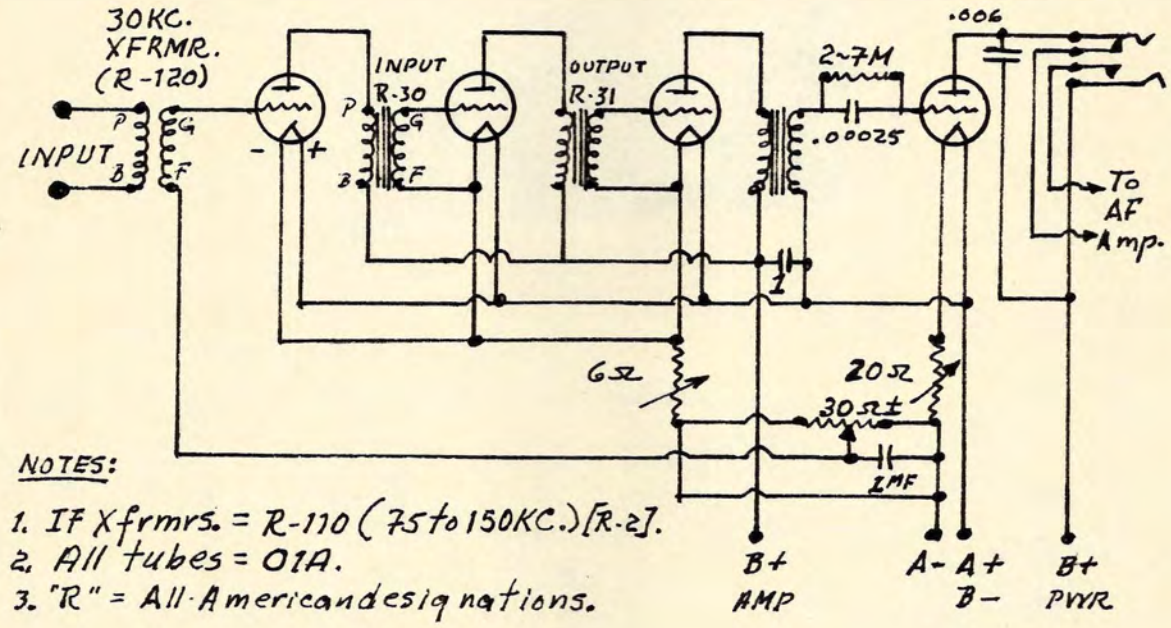

NOTES:

1. IF Xfrmrs. = R-110 (75 to 150KC.) [R-2].
2. All tubes = 01A.
3. "R" = All-American designations.

ALL-AMERICAN IF AMP.

R-2 ALL-AMERICAN NEUTRODYNE

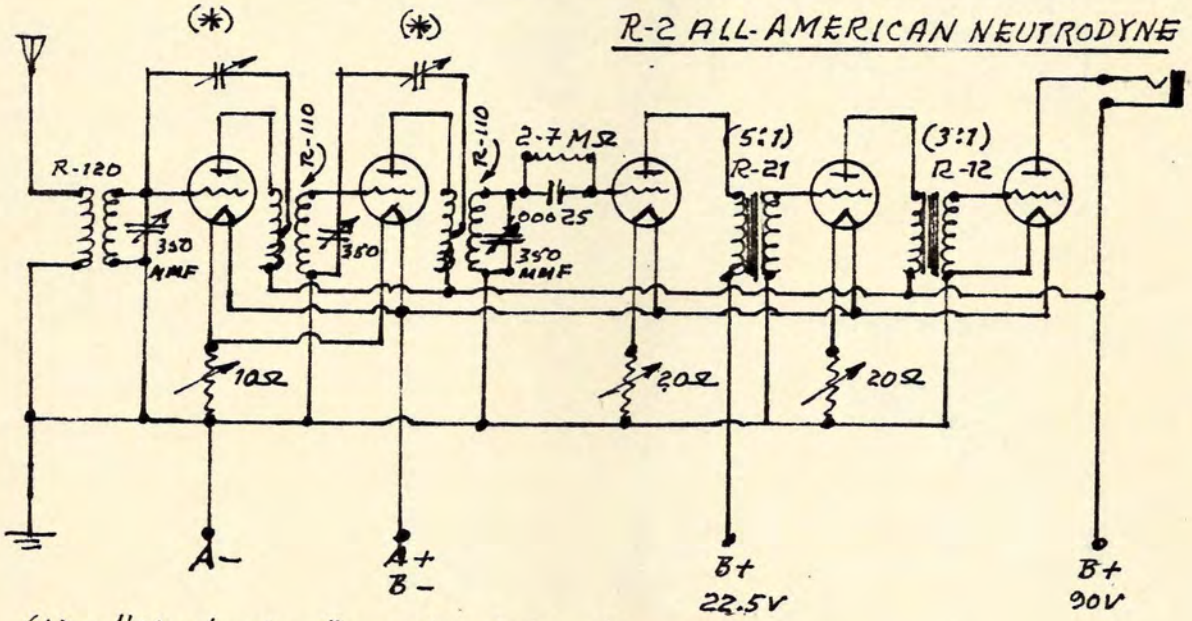

(*) = "Neutrodons" used originally.
All tubes = 01A.

(A-A File)

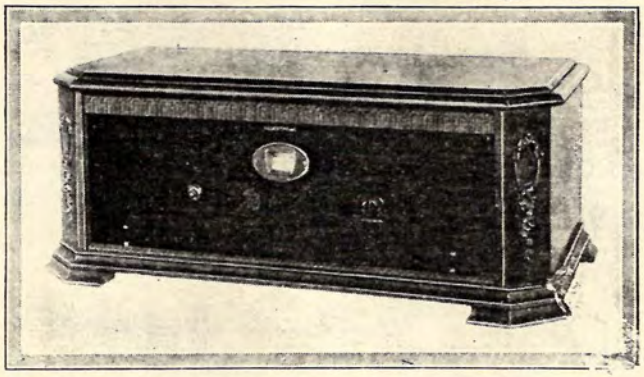

REMLER Drum Dial.
(2) KARAS "Hamonik" Xfrmrs.
Panel = 7" x 18"
Sub-Base = 8 x 17" (Formica)
(11) Binding Posts.

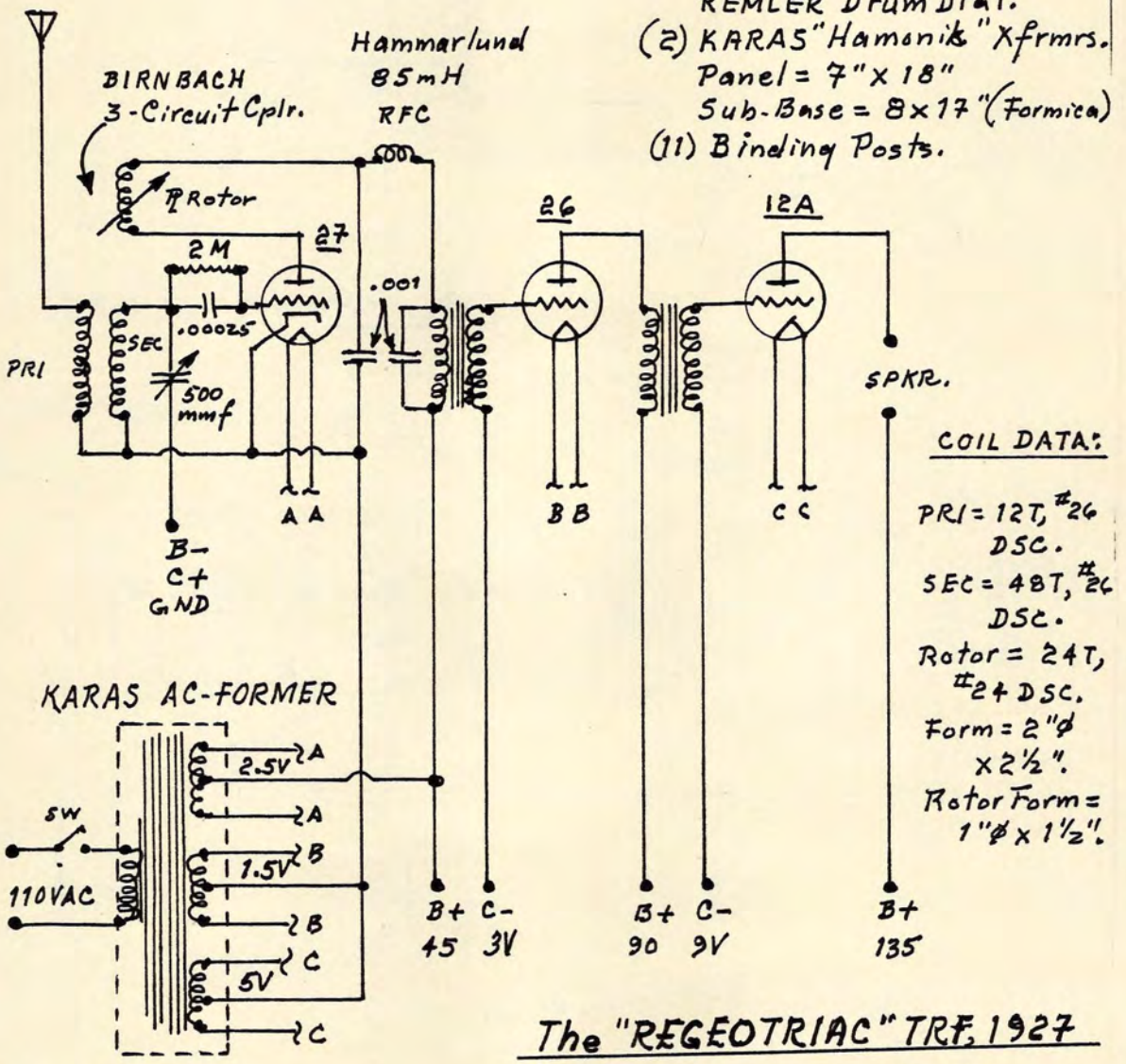

COIL DATA:

PRI = 12T, #26 DSC.
SEC = 48T, #26 DSC.
Rotor = 24T, #24 DSC.
Form = 2"ø x 2½".
Rotor Form = 1"ø x 1½".

The "REGEOTRIAC" TRF, 1927

(An easy set to construct.)

(CB 9-28)

RAVEN SUPER-HET KIT, 1925; $25
Raven Radio Company, Albany, N.Y.
(Sht. 1)

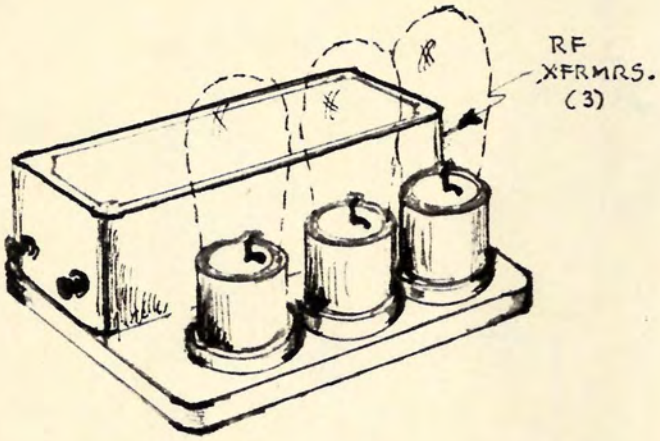

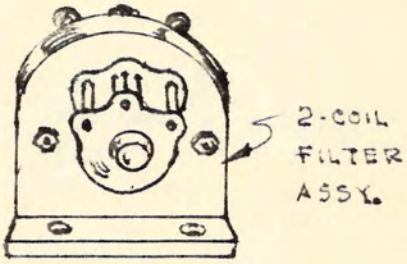

KIT CONSISTED OF:

2-Coil Filter Circuit.
RF Transformers (3).
Tube Sockets (3).
Oscillator.
Binding Posts.

Early Advert Copy:

"A complete compact monobloc RF long-wave length unit, perfectly matched, assembled, and wax-sealed in a Bakelite casing."

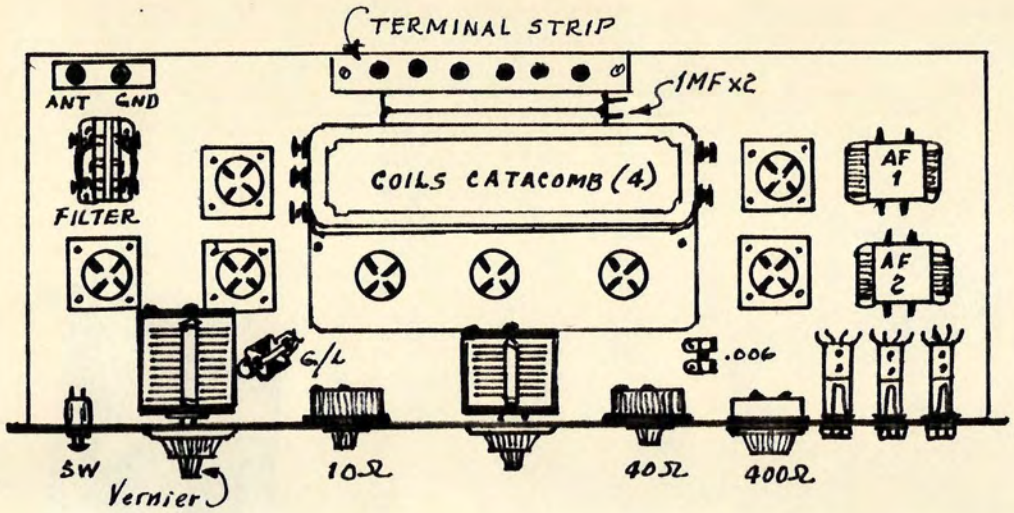

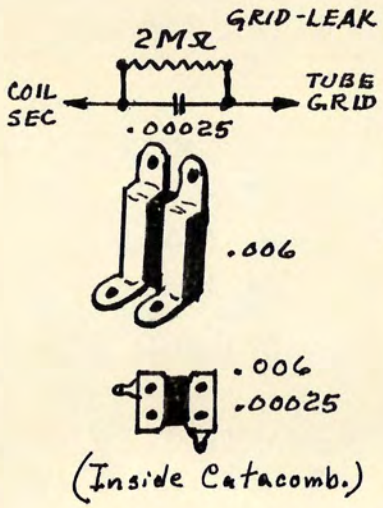

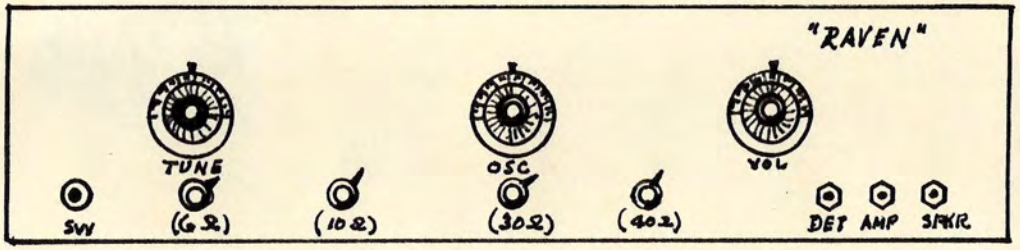

GENERAL LAYOUT

Panel = 7"x24"
Baseboard = 7"x23"

"RAVEN"
Super-Heterodyne
(1926)

RAVEN SUPER-HET, 1926; Sht. 2

REGENERATIVE PRE-SELECTORS, 1930

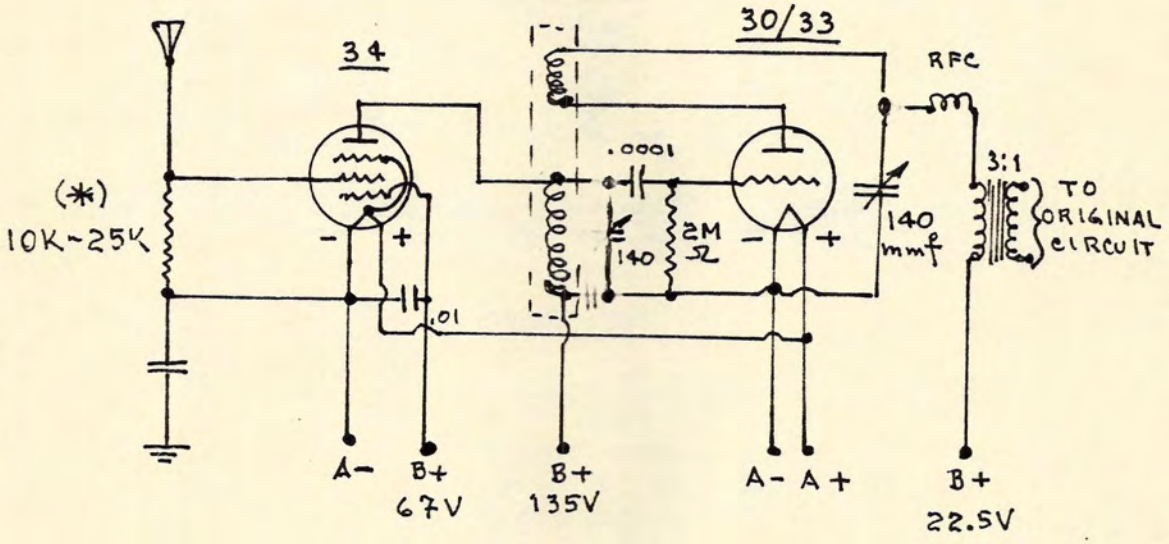

(*) = 2mH/8mH CHOKE MAY BE USED.

BATTERY-OPERATED

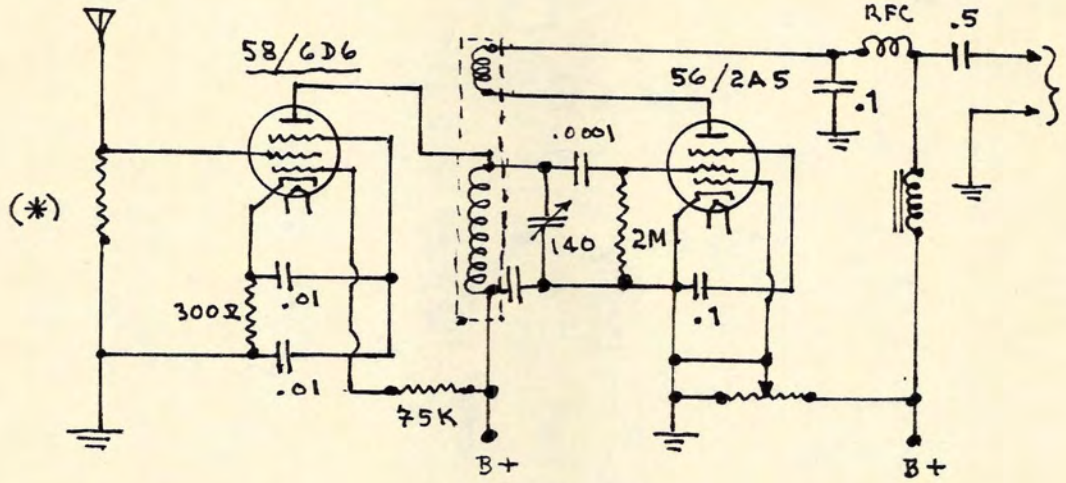

A.C. OPERATED

(See INFRADYNE Monograph.)

REMLER "INFRADYNE BC" RECEIVER, 1926

1st & 2nd Versions

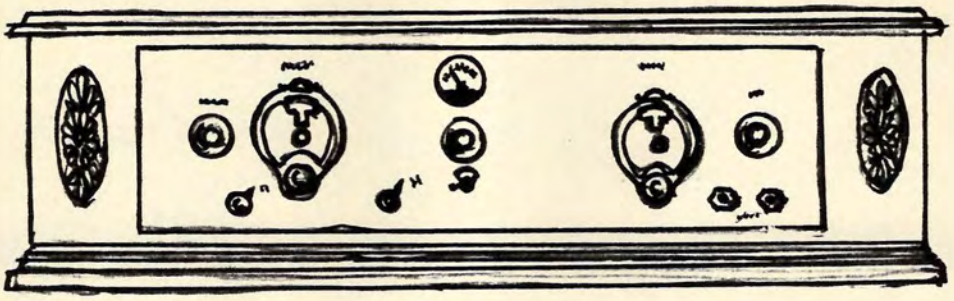

1926 "INFRADYNE" IN A CORBETT "C" CABINET

NOTES:
1. Panel = 7" x 30" x 3/16"
2. Redwood base = 10" x 34" x 3/4"
3. Thordarson Toroidal Cpils #33.
4. National "B" dials.
5. IF frequency = 3,200 KC.

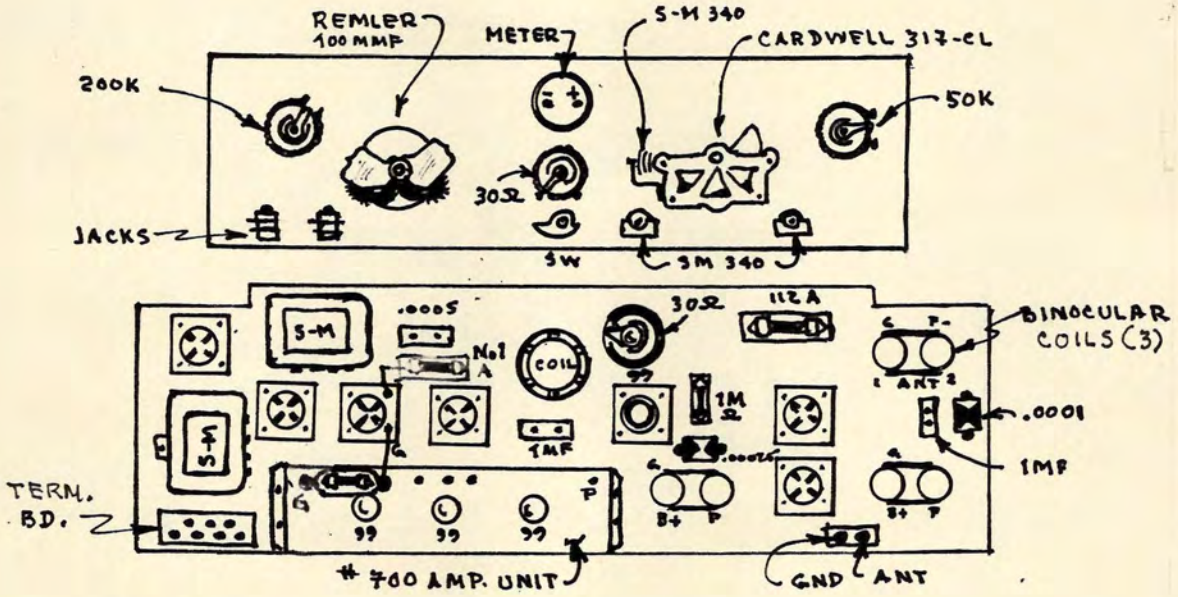

PLAN VIEW - 1st VERSION
(See 2nd Version base-
board for dimensions.)

(R 8-26)

R.W. AC-300 RECEIVER, 1927; Sht. 1

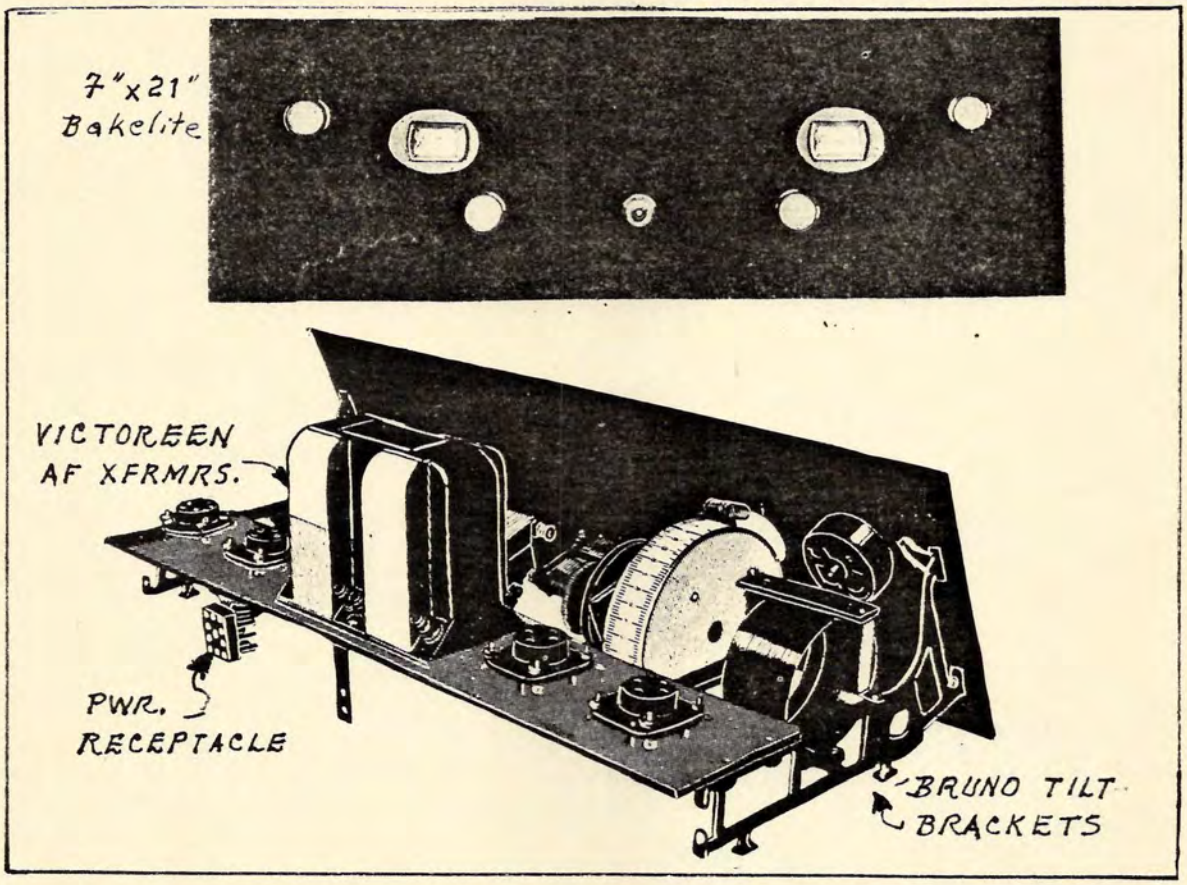

LIST of PARTS

T_1 = Hammarlund ANT Coil, HR-23.
T_2 = " 3-Circuit Coil, TCT-23.
T_3, T_4 = Victoreen AF Xfrmr. Unit. (Sangamo substitute.)
C_1, C_2 = Remler .0005 MF Variables: Drum Dials.

(3) 1 MF Condensers.
.00025 MF Grid Condenser w/clips.
(2) .0005 MF Condenser.
(2) 2 MF Condenser.
4 MF " .
.01 MF " .
500K Pot.
1K Pot. (4-Terminals)
20-Ohm, Type V Electrad,
50 " , " " .

RFC 85 mH
(2) Sub-Panel Brkts.
FIL Xfrmr.
(2) Tip Jacks
110 VAC Pilot Lamp.
(2) 25K Resistors.
75K Vol. Pot.
2MΩ Resistor
2K Resistor
Power Switch
10K Variable Resistor

(RW. 12-24/12-31-27)

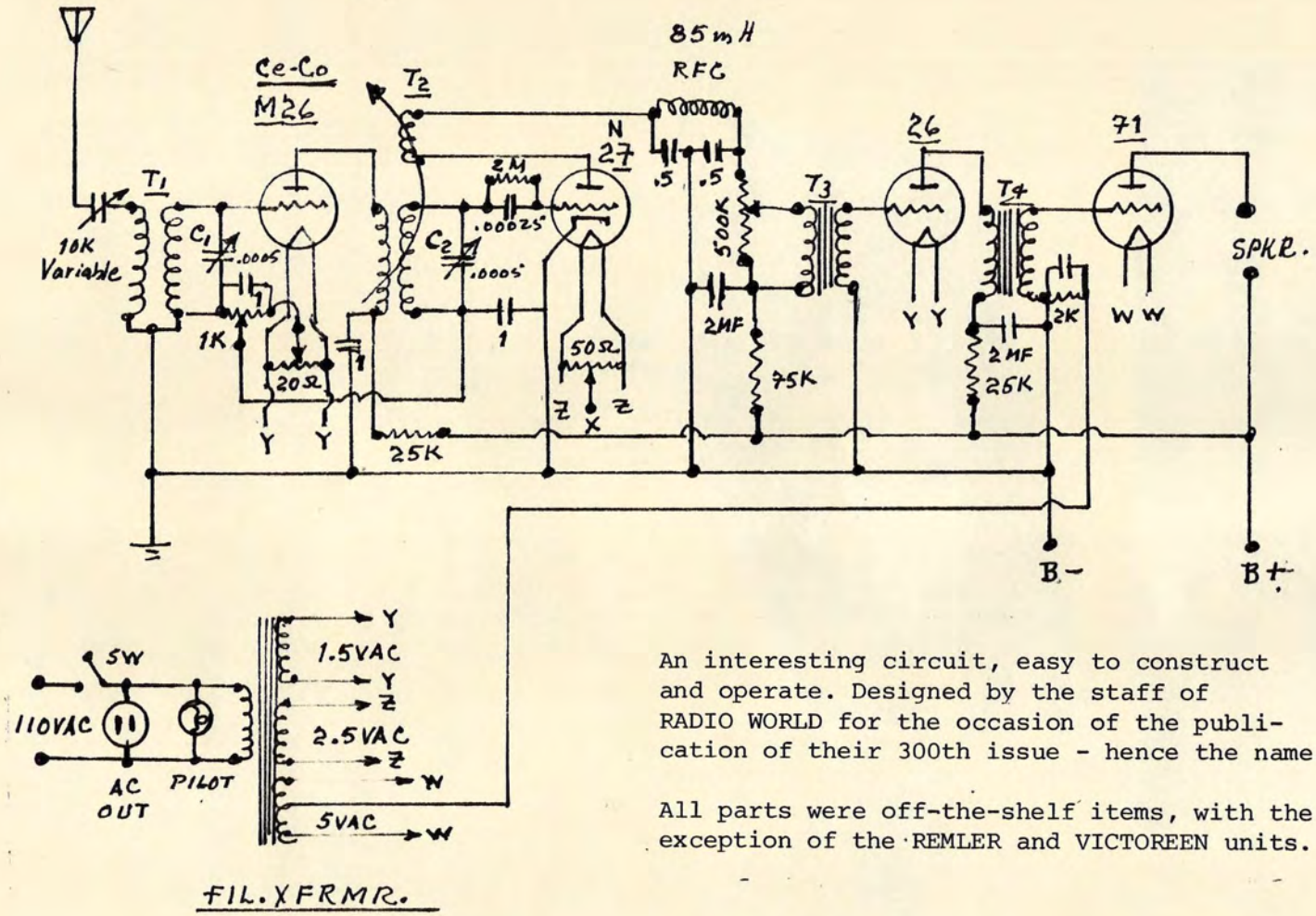

An interesting circuit, easy to construct and operate. Designed by the staff of RADIO WORLD for the occasion of the publication of their 300th issue - hence the name.

All parts were off-the-shelf items, with the exception of the REMLER and VICTOREEN units.

R.W. AC-300 RECEIVER, 1927; Sht. 2

Samson Assembly

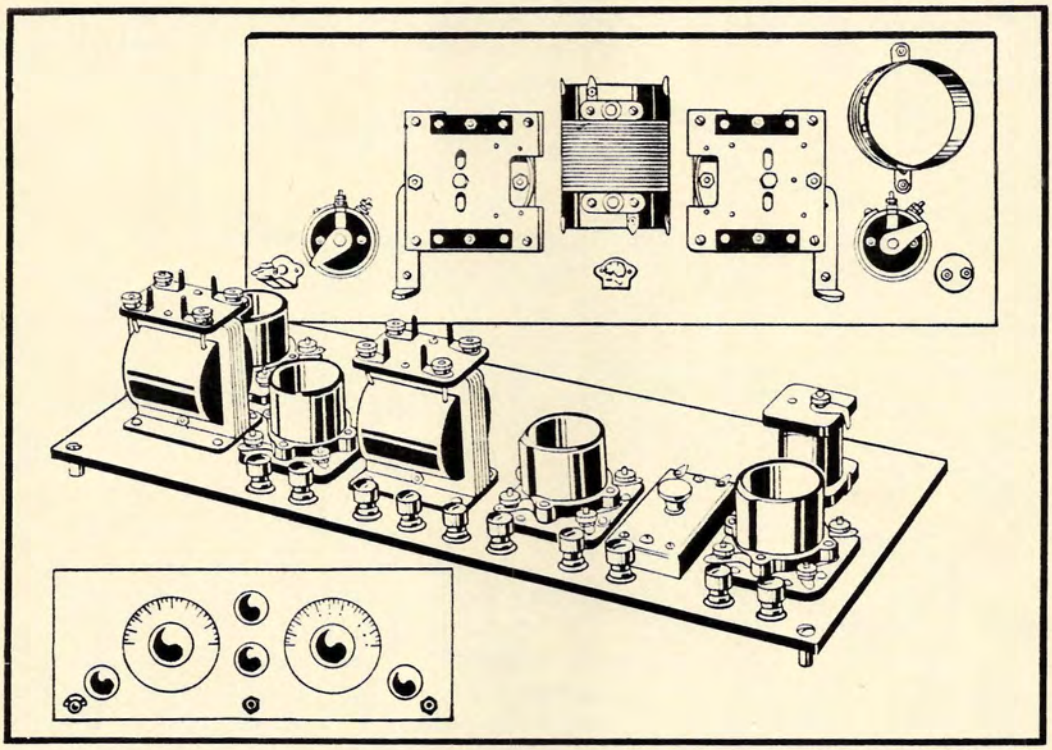

$ 7.50

$ 1.75

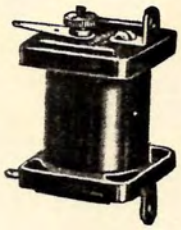

$ 1.50

THE SAMSON "T-C" RECEIVER of 1925; Sht. 1

The SAMSON "T-C" was the result of collaboration between a professor Bowles of M.I.T., in 1925, and the SAMSON ELECTRIC CO. The company had been founded in 1882 in Canton, Massachuetts, manufacturing electric goods and telephone components.

The "T-C" was only offered as a kit, and was much touted by Neely in "Radio In The Home" one Summer long, there in Philadelphia. The SAMSON components were excellent, but the "T-C" enjoyed only a Springtime popularity. The chief reason seems to have been that the set was difficult to netralise, was unstable on strong signals, and while quite sensitive, was not very selective. These were valid objections, as my own experience in constructing all three versions of the "T-C" bears out.

A SAMSON netrualising condenser seems to have been critical, as others by Bremer-Tully, National, Amsco, etc., were tried, but were not as efficient as SAMSON. Oddly enough, those other neutralising condensers were actually included in some kits, which sold for $19. Another major problem that I encountered was that of a very high-pitched whistle that was not affected by rotating the tickler, or by disconnecting the ANT and GND. Elimination was secured by placing a .0005 mf condenser across the "G" and "F" posts of the last AF xfrmr.

The fact that the kits sold by various outlets, such as the mail-order houses of New York and Chicago, were not all of a kind - i.e., non-standardisation of parts, except for the SAMSON items - probably contributed to the lack of sustained popularity. The mail-order houses would buy the basic SAMSON kit and add components on hand, and even though such components carried names such as Brach, Daven, Radiart, Rauland, Carter, Frost, etc., all quality parts, the set simply didn't get off the ground.

There were three versions of the "T-C", differing in the audio stages - e.g.:

Transformer-Coupled.
Resistance-Coupled.
Impedance-Coupled.

In terms of actual performance, they were relatively the same, with the transformer-coupled version the easiest to construct.

You will find the circuitry of all three versions in the following pages, with a simpler version by Sleeper. If you have the critical Samson parts on hand, construction of the "T-C" could prove rather edifying.

(RW 10-23/3-4-26)

THE SAMSON "T-C" RECEIVER (Sht.2)

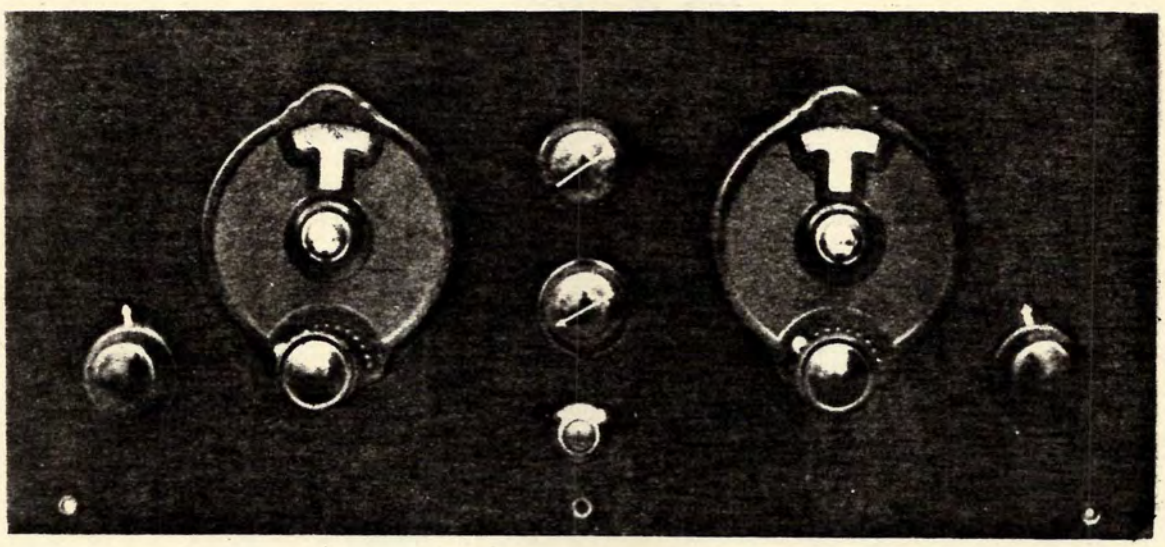

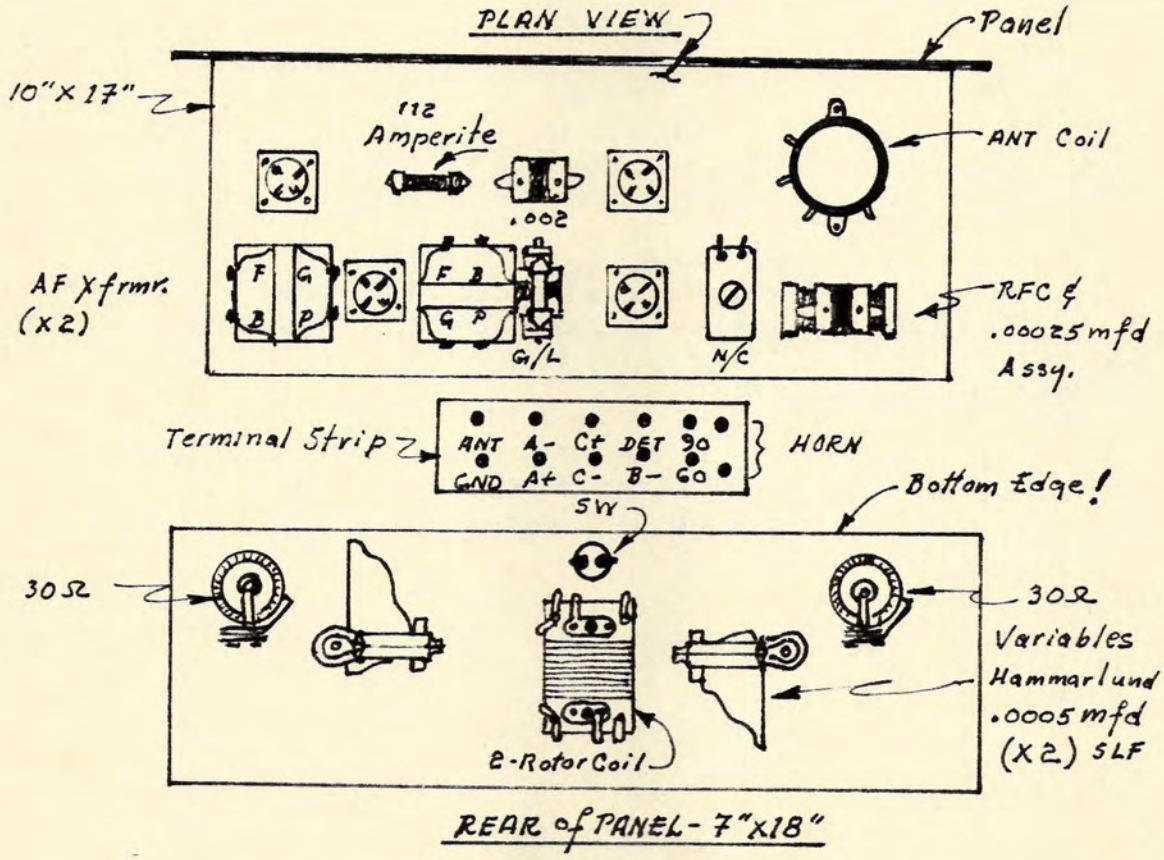

SAMSON T-C TRF RECEIVER, 1925: Sht. 3

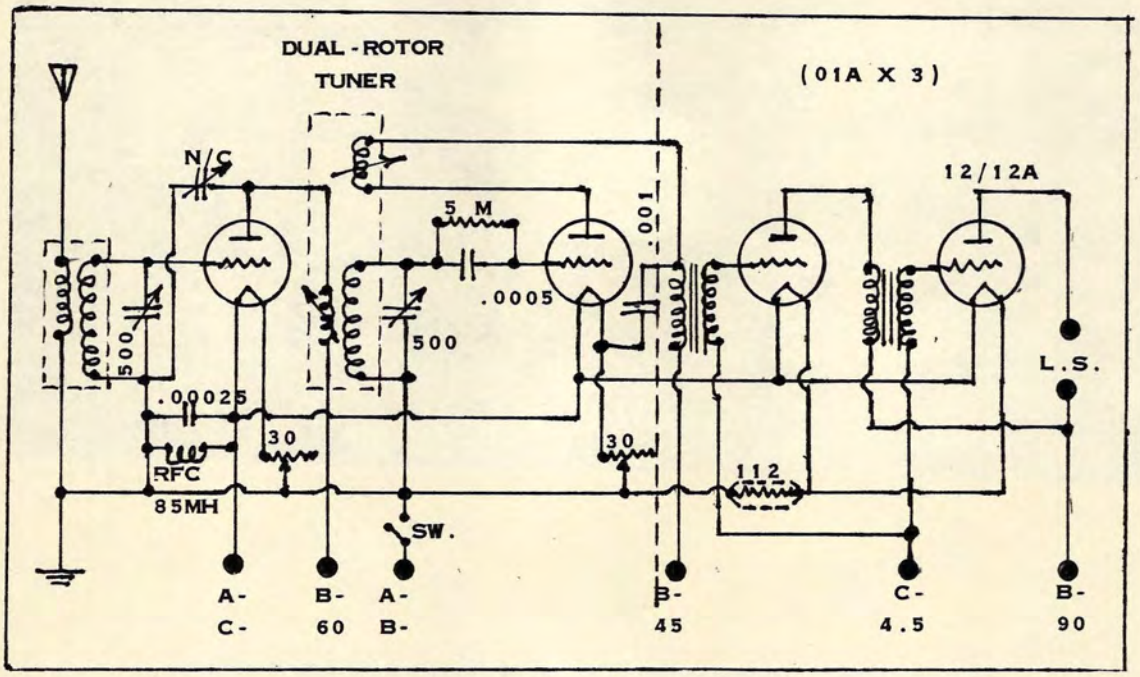

The basic T-C circuit is shown at left of the dotted line. A conventional AF transformer configuration is shown, which was and is the easiest to construct.

In the following pages you will find the other two audio amplifier configurations which were adapted to the basic T-C circuit and touted equally in early radio media. Either configuration can be tied into the basic T-C circuit, as shown, at right of the dotted line in the above sketch.

The values shown in the basic circuit apply to any audio adaptation. In what was called the "Final" version of the T-C, and in Sleeper's version, some values changed, which you will also find in the following pages.

SAMSON "T-C" RECEIVER. Sht. 4

AF Amplifier Configurations

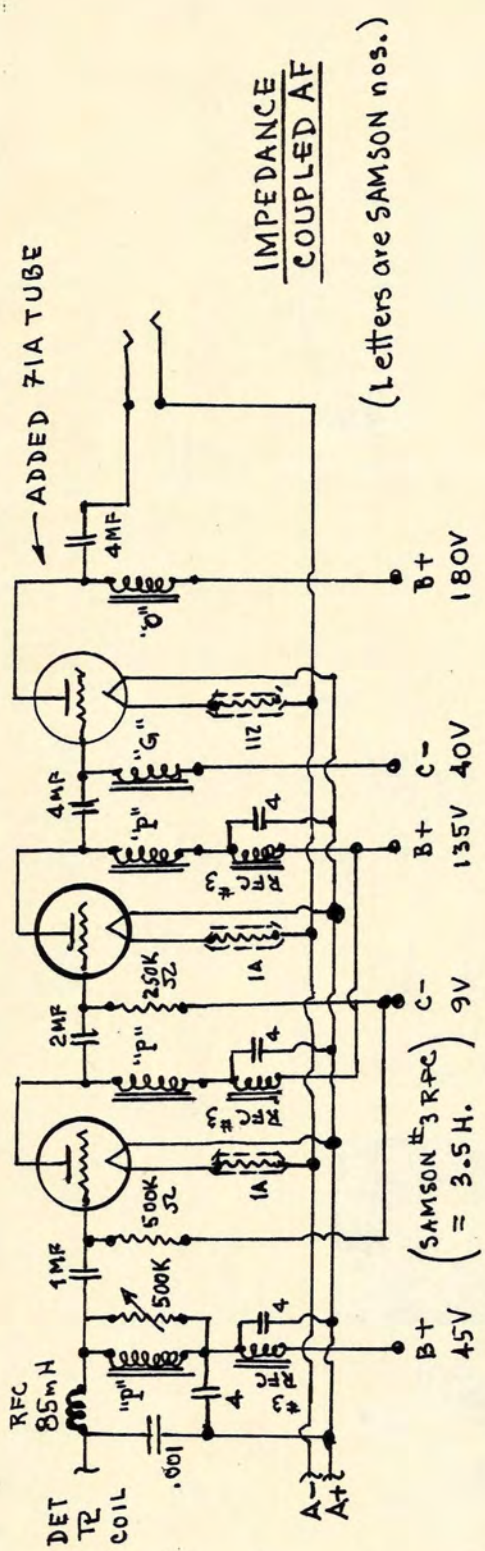

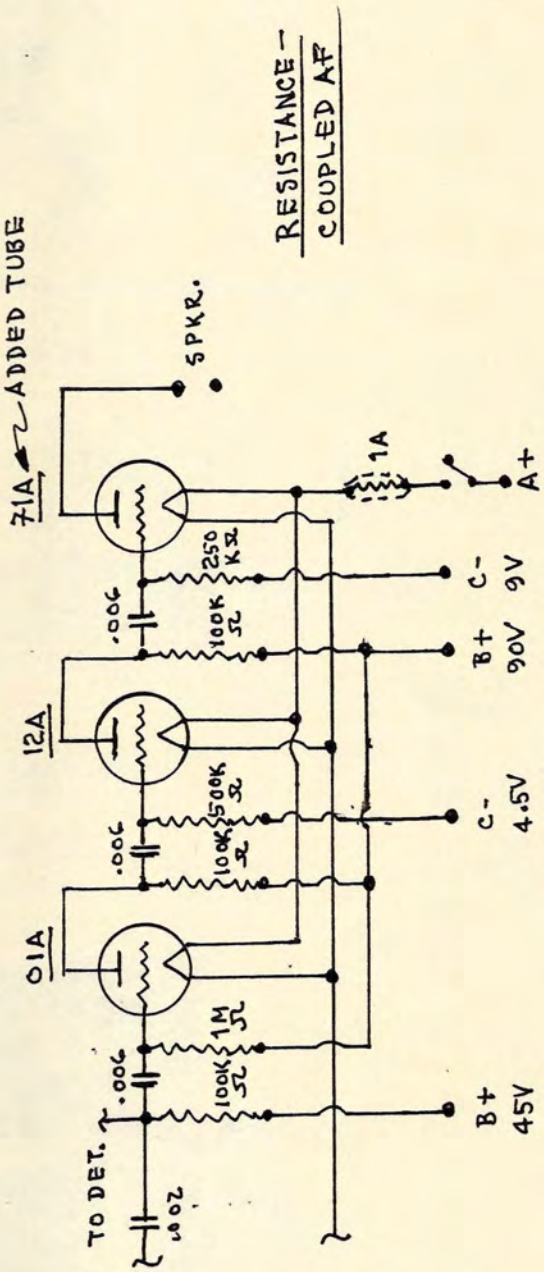

THE SAMSON "T-C" RECEIVER (Sht.5)

Resistance-Coupled Layouts

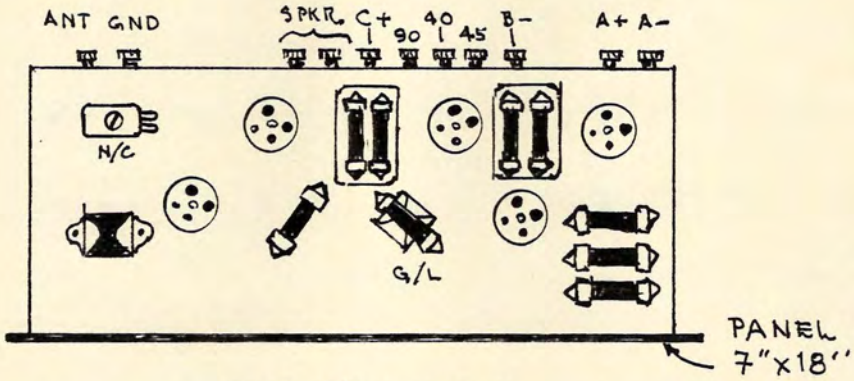

BASEB'D. LAYOUT

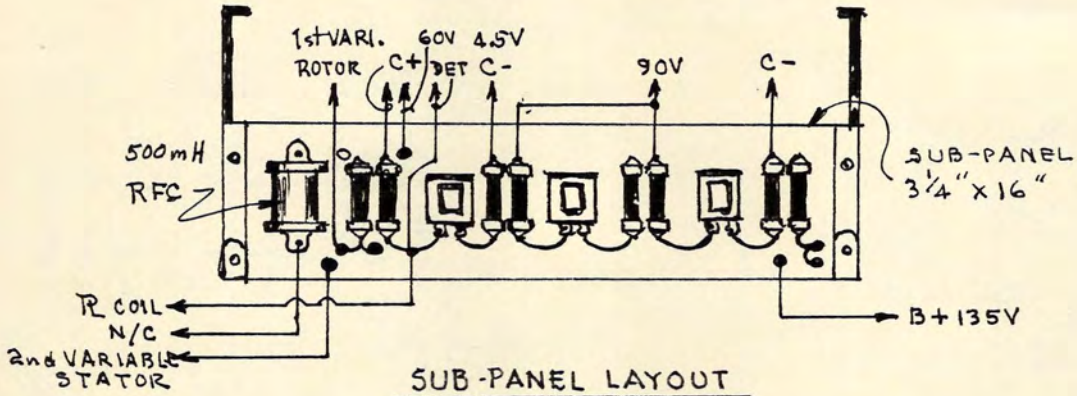

SUB-PANEL LAYOUT

Tube sockets are mounted directly above R-C units.

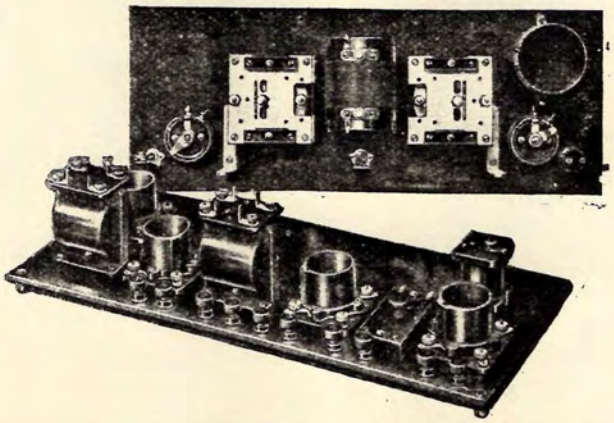

SAMSON "TCR" COIL CONNEXIONS

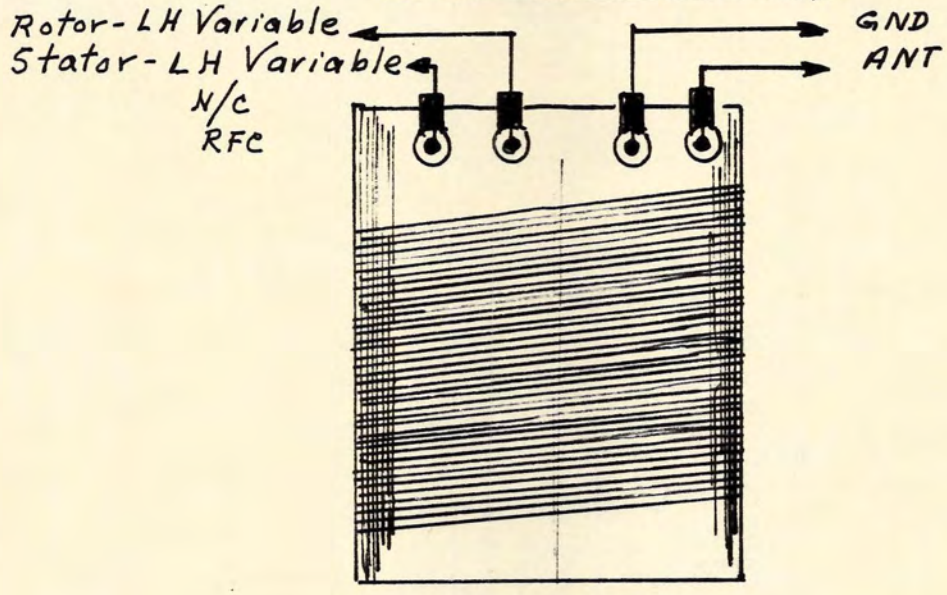

ANT COIL

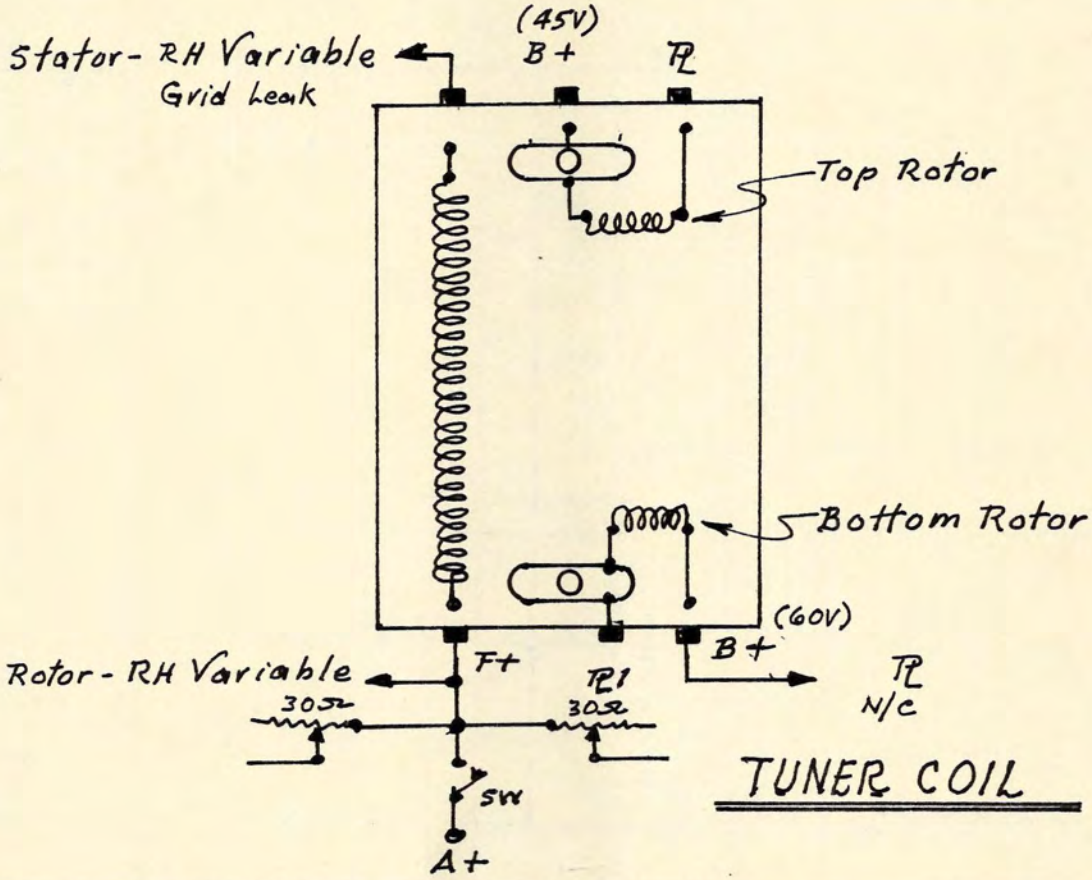

TUNER COIL

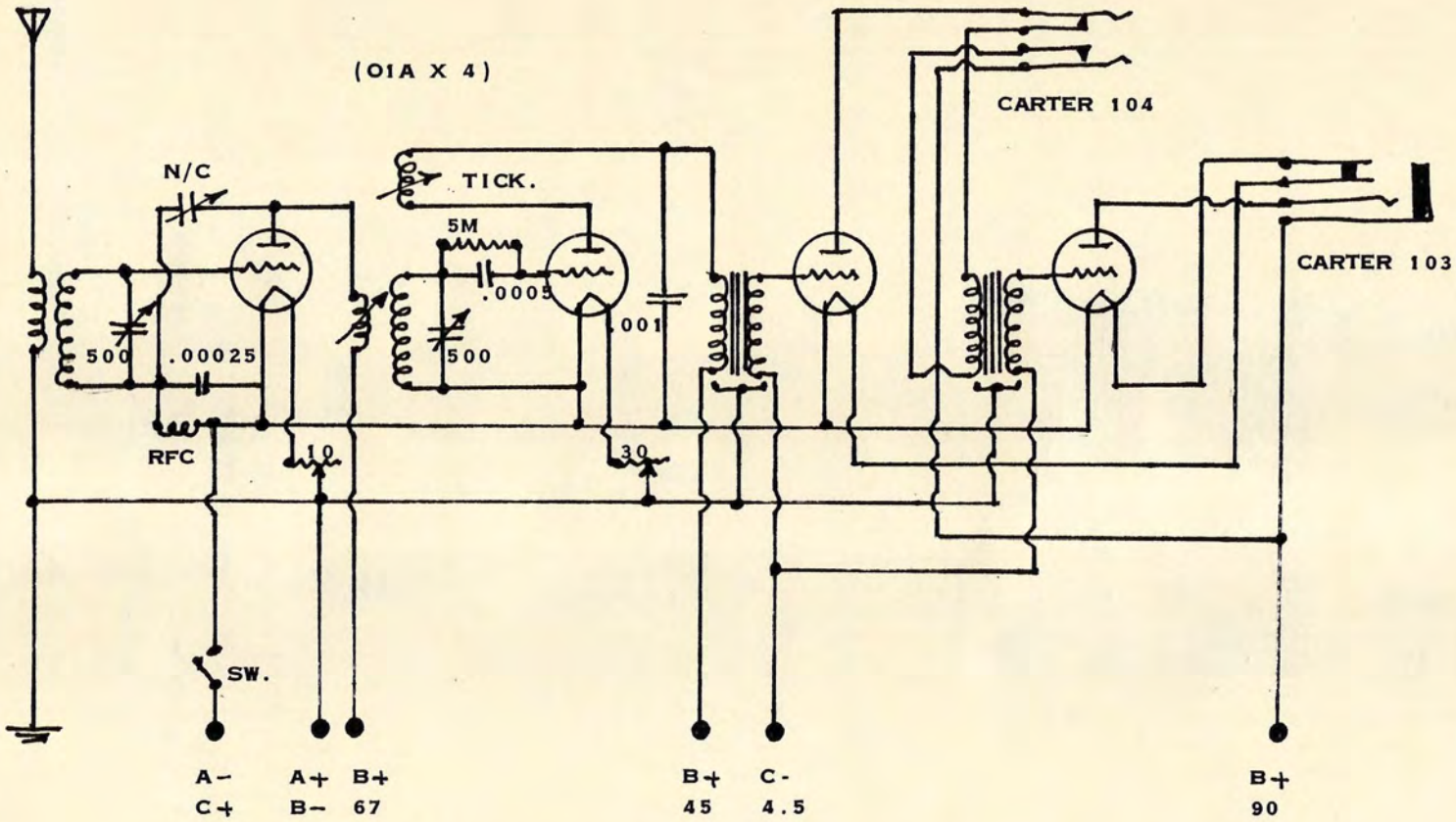

SLEEPER's VERSION OF THE SAMSON T-C RECEIVER;1925

GENERAL PARTS LIST:

500 MMF VARIABLES; HAMMARLUND (2)
SAMSON NO. 3 RFC
SAMSON TRC TUNER COIL (DUAL ROTOR)
SAMSON ANT COIL
GEN-RAD RHEOSTATS (2)
EBY BINDING POSTS (10)

PANEL - 7" X 18"
BASE - 7" X 17"
BENJAMIN SOCKETS (4)
SAMSON SYMPHONIA
AF XFRMRS. (2)

WD-11'S OR 99'S MAY BE USED.
(7-8-25)

1927 (FINAL) VERSION, SAMSON TC RECEIVER; Sht. 1

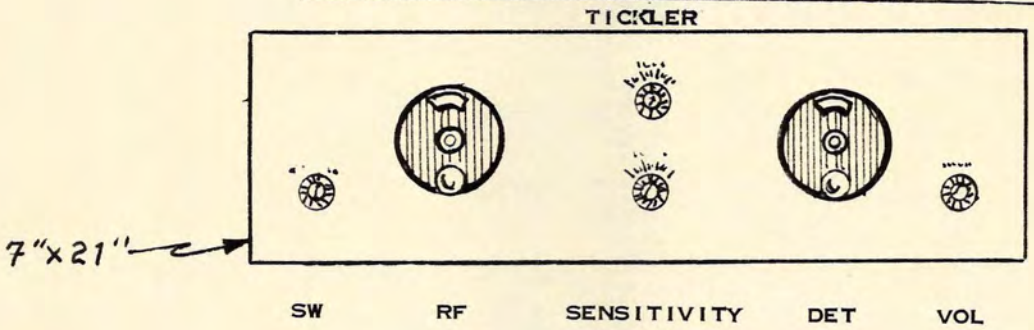

PANEL

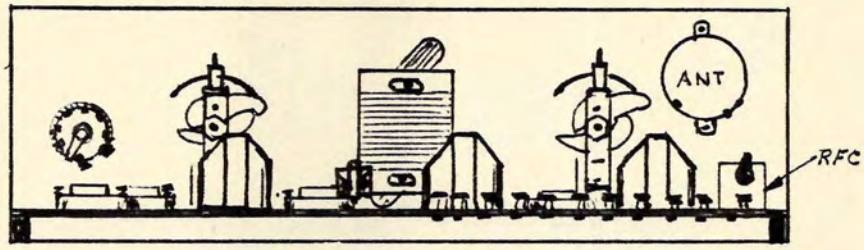

REAR VIEW

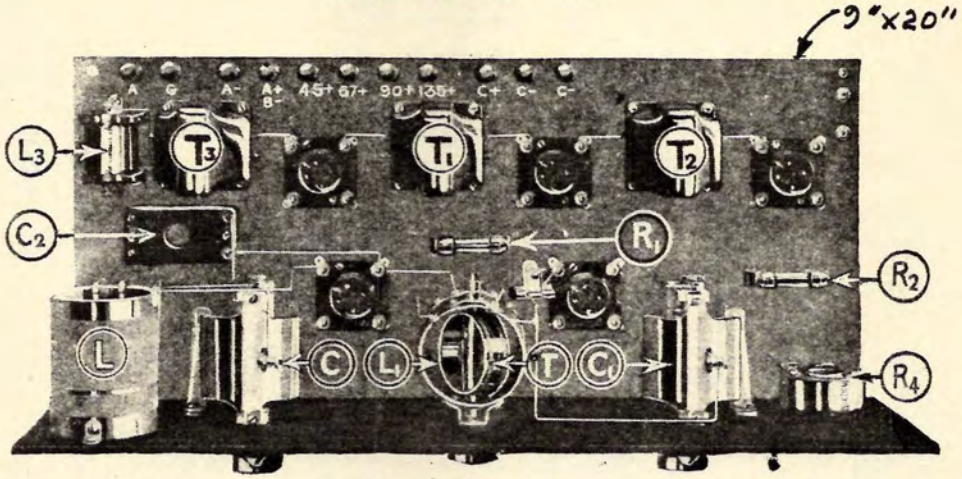

PLAN VIEW

C - RF VARIABLE
C2 - N/C
C1 - DET VARIABLE
L1 - DUAL ROTOR CPLR.
L - ANT COUPLER

L3 - RFC, 85 MH
R1, R2 - AMPERITE
R4 - VOL. CONTROL
T - TICKLER
T1, T2, T3 - AF XFRMRS.

(RN 2-27)

SAMSON T-C RECEIVER: THE FINAL VERSION: 1927: Sht.2

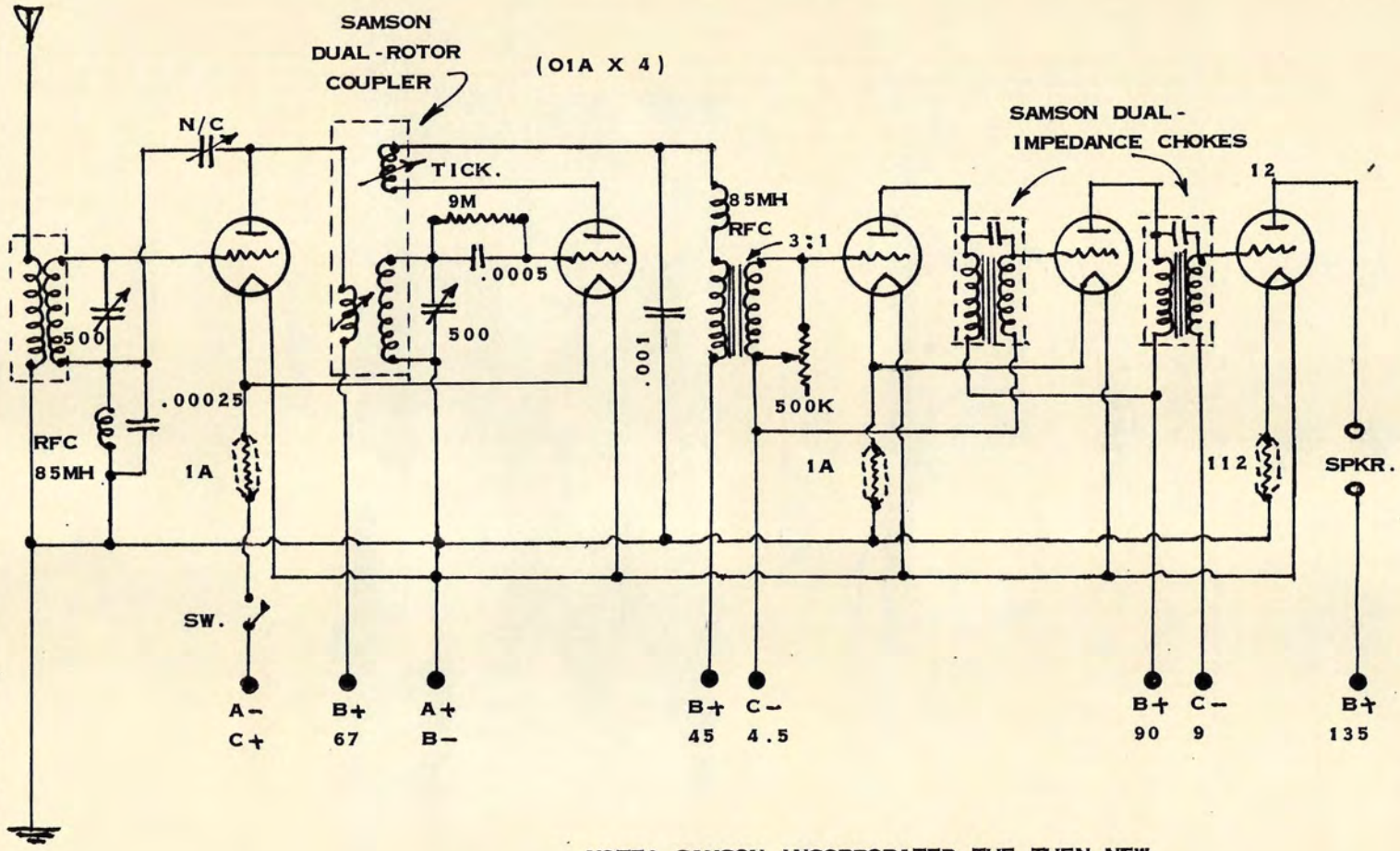

NOTE: SAMSON INCORPORATED THE THEN-NEW DONLE SYSTEM OF AUDIO AMPLIFICATION IN THIS FINAL VERSION OF THE T-C. PRIOR T-C SETS CAN BE EASILY MODIFIED TO REFLECT THIS CHANGE.

(RN 2-27)

1927 (FINAL) VERSION, SAMSON TC RECEIVER; Sht. 3

General Notes & Coil-Winding Data

1. While this circuit was actually designed in 1925, the advent of impedance-coupled audio sexion came into vogue, and some modifications were made to the circuit to incorporate such. The circuit, however, will function nicely with standard AF transformers and an output transformer.

2. While this circuit called for the SAMSON variables that sported a "roof" over the plates, other SAMSON, or comparable variables may be used. The lug on the "roof", incidentally, went to lugs on the two SAMSON coils.

3. The knob on the panel marked "Sensitivity" controlled the PRI winding of the ANT coil.

Coil-Winding Data:

If you do not have the original SAMSON coils, although they do turn-up frequently at swap-meets, but this circuit interests you, the following data are of the original coil specifications issued by SAMSON. The form may be celuloid, Bakelite (thin-walled), shellaced cardboard, or six square plastic strips, .250", air-wound.

ANT COIL: Form 2.5"Ø x 3.250".

PRI = 18 Turns, #26 DCC Wire.
SEC = 54 Turns, #26 DCC Wire.

DOUBLE ROTOR CPLT.: Form 2.5" x 3.5".

PRI (Lower Rotor) = 40 T, #28 DCC.
SEC = 54 T, #26 DCC.
TICKLER (Upper Rotor) = 16 T, #28 DCC.

* * *
* *
*

SAMSON "DE LUXE FIVE" TRF, 1926: Sht. 1

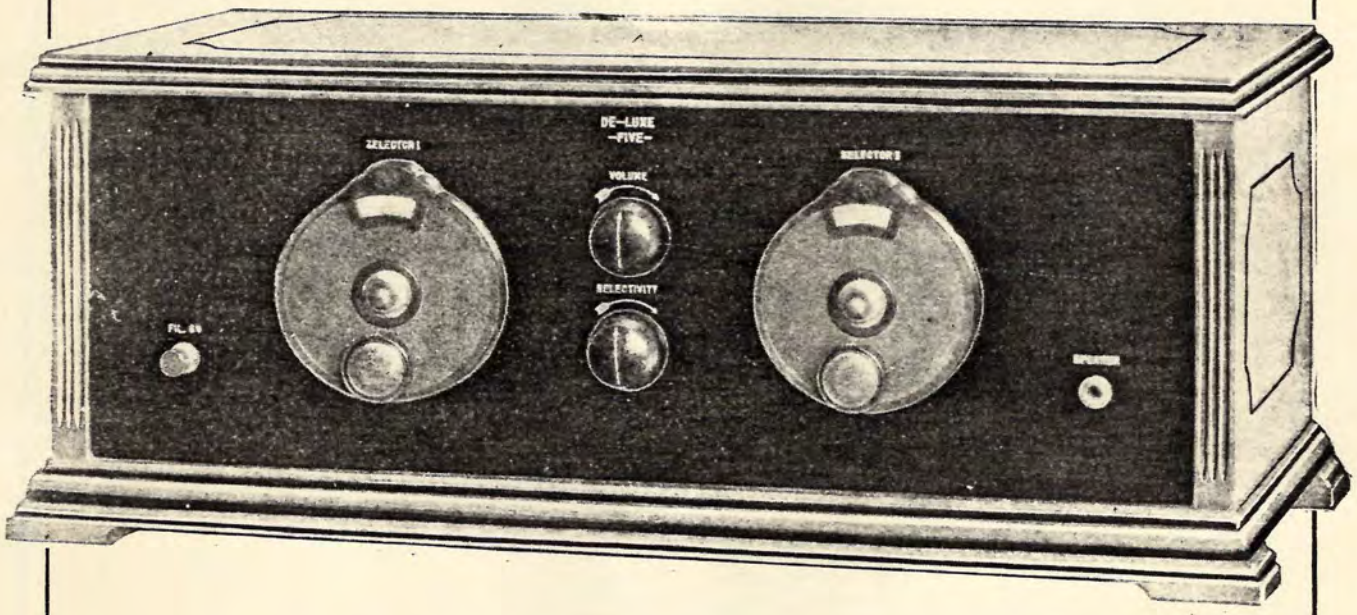

One encounters rather pointless discussions as to whether the SAMSON TC or the "DeLuxe Five" was the first, now and then, and does it really matter? Both versions of a basic circuit were excellent examples of thoughtful design and, of course, those very fine SAMSON components. My own impression is that the "DeLuxe Five" was the simpler version, simply because the variable condensers with a "roof" preceded SAMSON variables without a "roof".

The employment of dual impedance transformers was also offered for the TC, as one of three options. Impedance coupling is used here, as was originally specified, but if you do not have those transformers, you may easily substitute resistance-coupling, such as two DAVEN "Resisto" units. The thinking behind using impedance coupling was that a high impedance was presented to the alternating signal coming from the plate of the preceding tube, but offered a very low resistance to the charge leaking from the grid of the following tube.

While everything shown is straight-forward, your attention is directed to the connexions to the dual-rotor coupler. I have heard of home-constructors who were confused by them, and have received a few cries for help, which was provided. If you have trouble following the schematic, I have included a seperate sketch of the dual-rotor coupler with all identification markings.

SAMSON "DE LUXE FIVE" TRF, 1926: Sht. 2

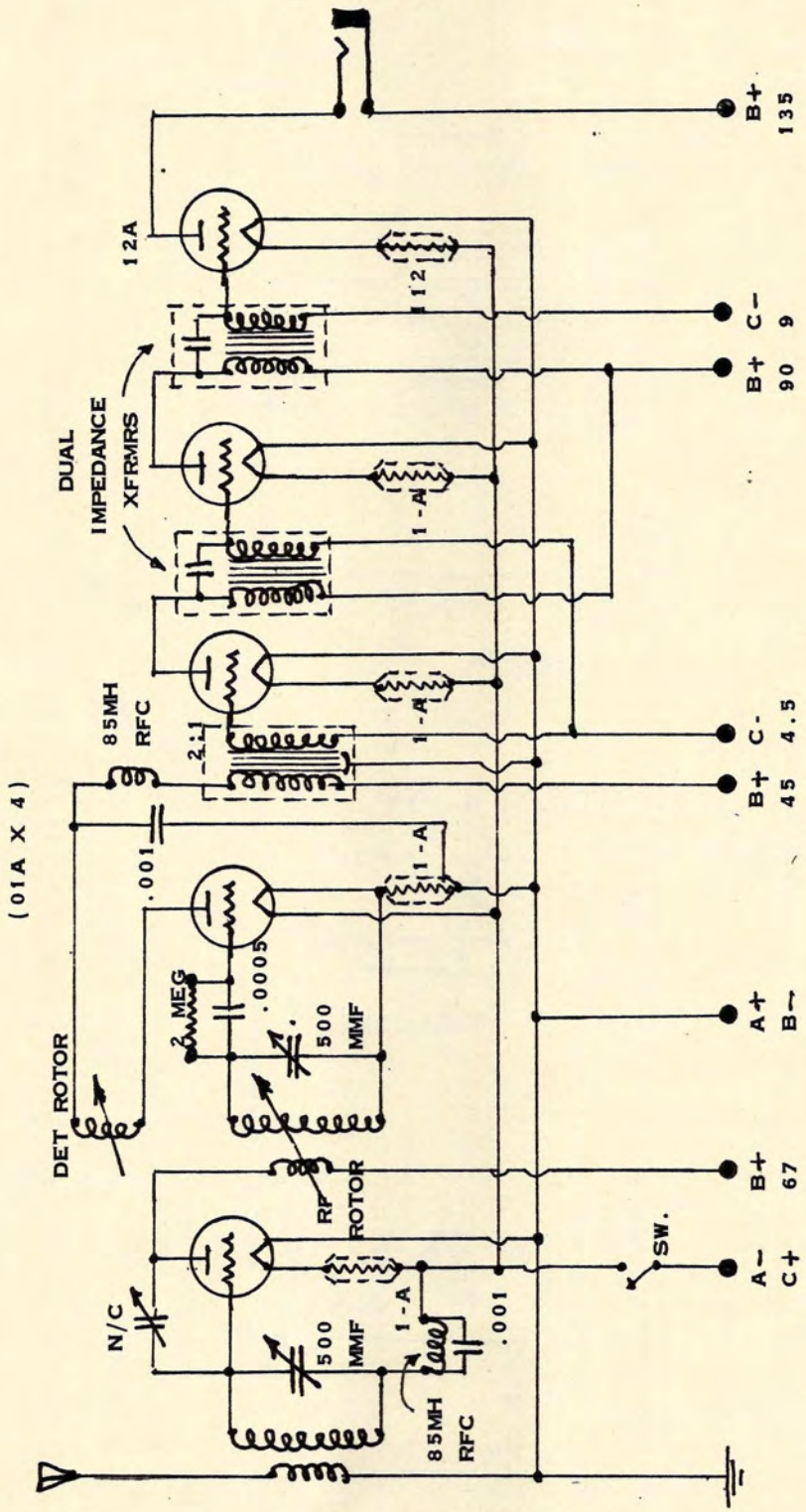

SAMSON "DE LUXE FIVE" TRF, 1926: Sht. 3

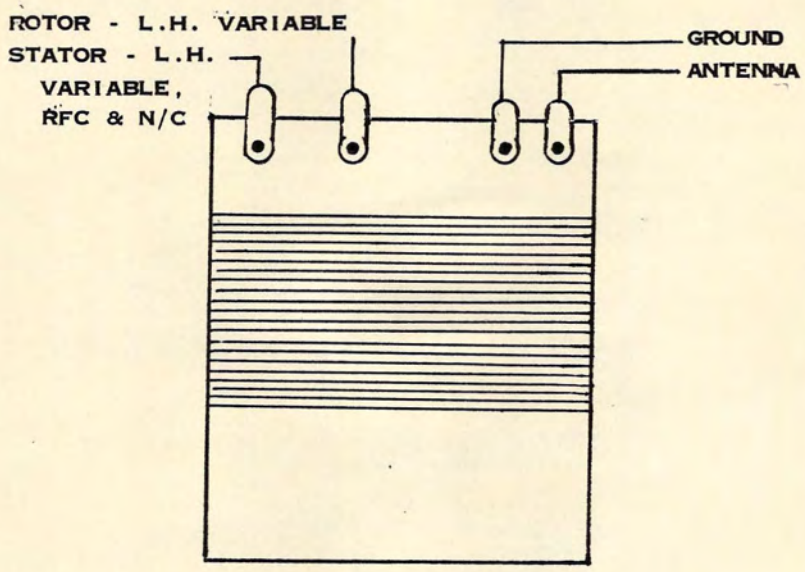

ANTENNA COIL

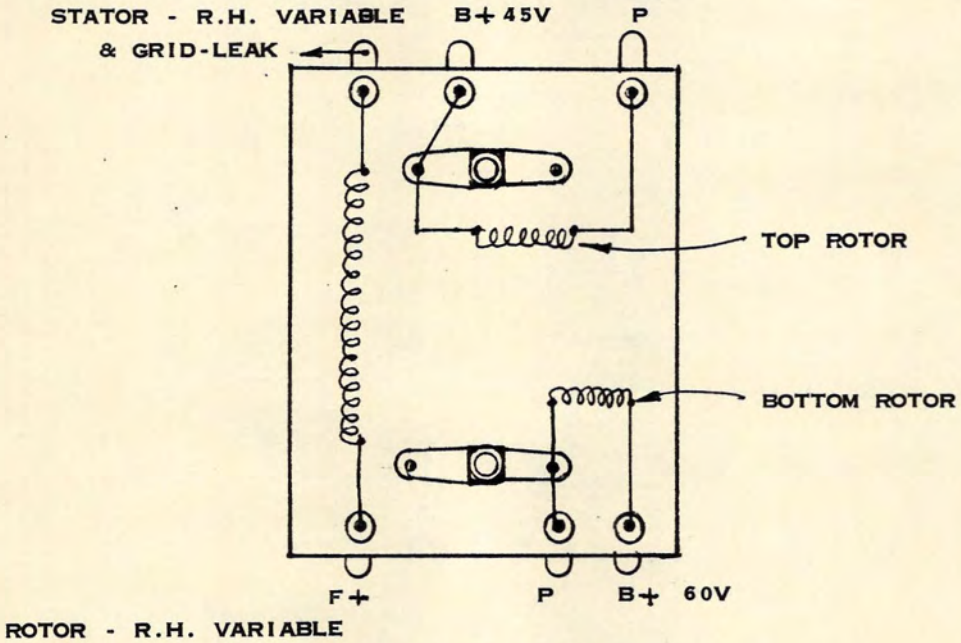

DUAL-ROTOR COUPLER

SAMSON "DE LUXE FIVE" TRF, 1926: Sht. 4

GENERAL PARTS LIST

ANT Coil, Type #41	SAMSON
Dual-Rotor Coupler, Type #31	SAMSON
500mmf Variables (2)	SAMSON
RFC #85 (2)	SAMSON
Neutralising Cond., Type 61	SAMSON
AF Transformer, HW-a3	SAMSON
Dual-Impedance Xfrmrs, Type D (2)	SAMSON
Universal Verniers (2)	SAMSON
Grid-Leak, 2-Megohms	ELECTRAD
Grid Condenser .0005	ELECTRAD
Fixed Condenser .001	ELECTRAD
Fixed Condenser .0001	ELECTRAD
Battery Switch #608	FROST
Open Circuit Jack #953	FROST
Binding Posts (11)	EBY
UX Sockets (5)	EBY
Amperite 1-A (4)	RADIALL
Amperite 112	RADIALL
Panel 7" x 21"	RADION
Baseboard 9" x 20" x .5"	(Wood)
Terminal Strip 7.5" x .75"	Bakelite
30 Feet #12 Tinned Copper Wire	BELDEN
3 Dozen #6 x .625 RH Screws	
6 #5 x .5" RH Screws	
Ground Clamp (Optional)	BLACKBURN

Set may be placed in a Corbett "C" or Fritt cabinet, provided the depth of the cabinet is 10" - which was a standard size at the time. Any good B-eliminator may be used.

* * *
* *
*

SAMSON "DE LUXE FIVE" TRF, 1926: Sht. 5

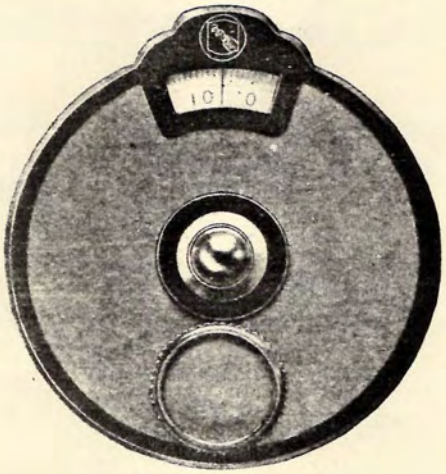

Neutralising Condenser

Vernier Dials

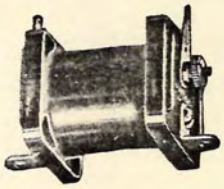

Radio Frequency Chokes

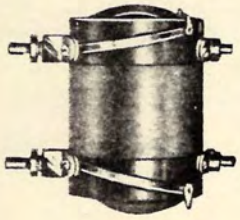

Dual-Rotor Coupler

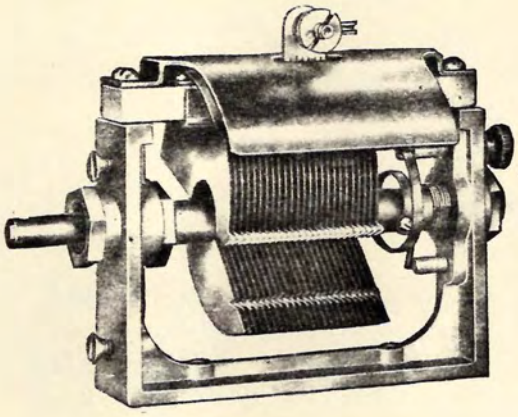

Variable Condenser w/ "Roof"

SAMSON "DE LUXE FIVE" TRF, 1926: Sht. 6

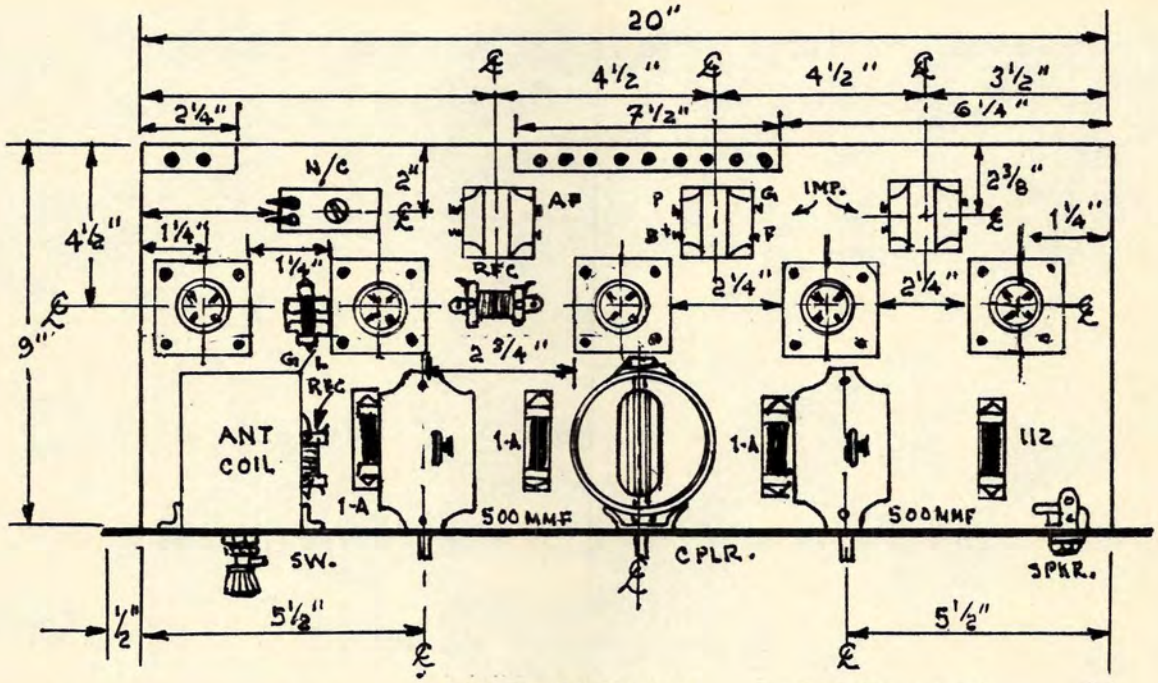

BASEBOARD LAYOUT

NOTE: Socket placement shown is for the originally specified EBY UX sockets; other sockets may require different dimensioning.

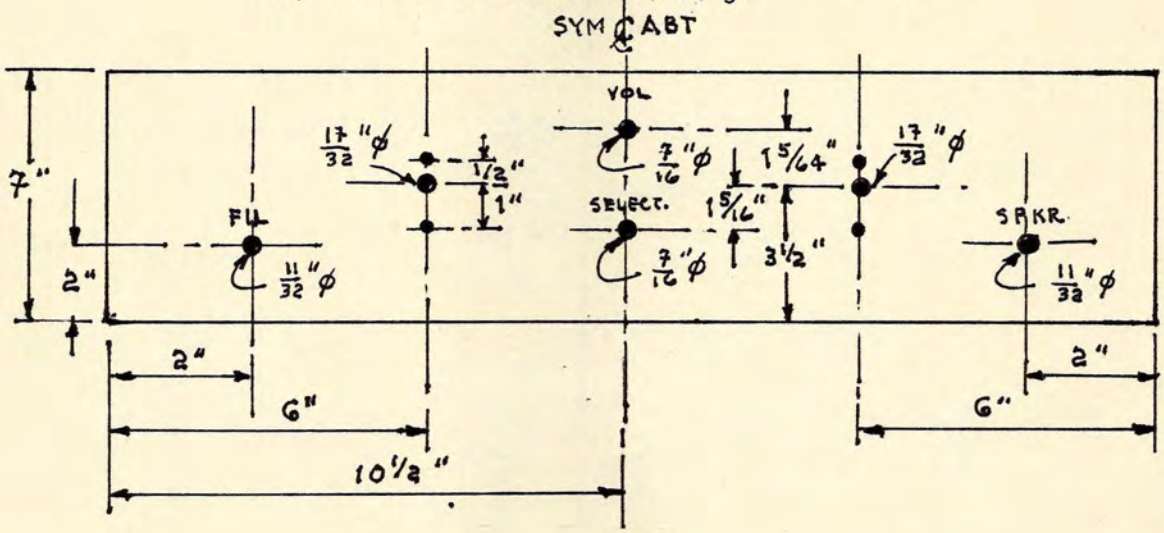

(CRCB 9-26)

PANEL LAYOUT

SAMSON "DE LUXE FIVE" TRF, 1926: Sht. 7

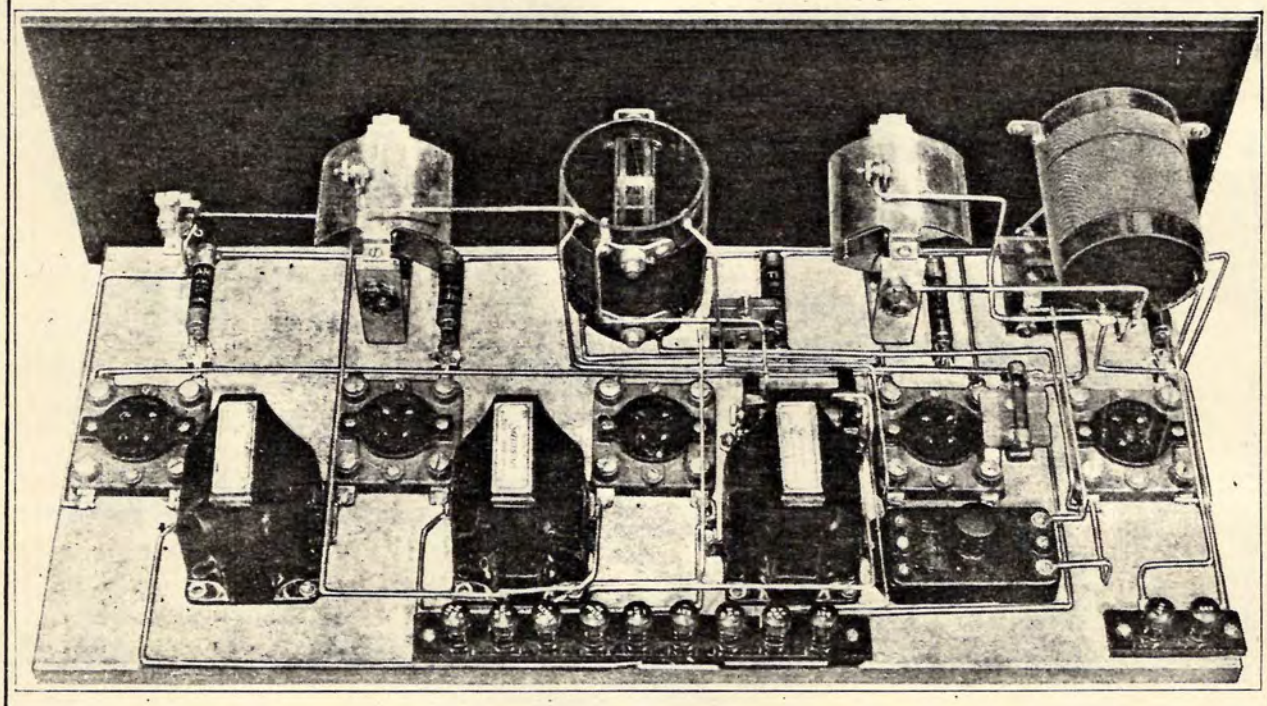

A three-quarter rear view of the "De Luxe Five", showing the placement of parts. It was a very neat layout.

Symphonic Transformers		$9.00
Push-Pull Input Transformer	Type X	5.50
Standard Transformers	Type HW-A3 Ratio 2-1, 3-1, 6-1	5.00
Dual Impedance	Type D (Donle Design)	5.00
Output Impedance	Type O	5.00
Push-Pull Output Impedance	Type Z	5.00
Plate Impedance	Type P	4.50
Grid Impedance	Type G	4.50
Audio Frequency Choke	Type No. 3	3.00

The original SAMSON AF Transformers were open-frame with terminals on the top. The later encased configurations were much more appealling to the eye, and all followed the configuration shown in the rear view above, whether AF, impedance, P-P, output, etc.

SARGENT-RAYMENT SIX S.G. RCVR.
(See INFRADYNE Monograph.)

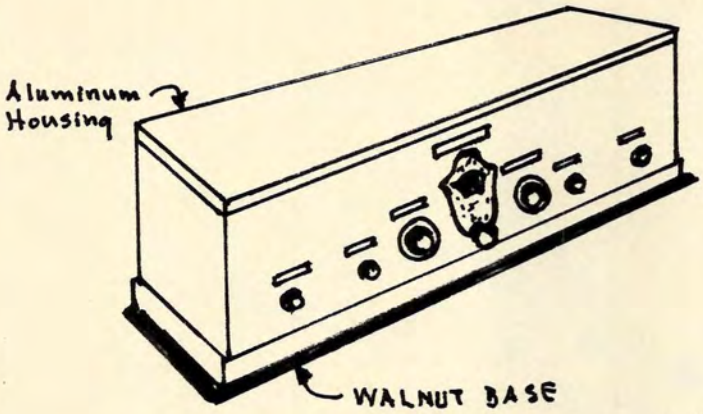

4 Tuned RF Circuits.
3-Stage S,G, Amplification.
Individual Verniers.
Detector.
2 AF Amplifier (Clough).

Aside from being rare in terms of collecting vintage radios, this model was the precursor to the Sargent-Rayment Seven, which proved to be rather popular for a couple of years, being pushed by Silver-Marshall. For the basic circuitry, refer to the shematic of the S-R 7. To publicise the Screen-Grid Six (using the new 22 tubes), S-R published a 16-page booklet entitled "Radio Par Excellence - 1929", which was distributed gratis. Kit $120.

SAMSON SUPER-KIT, 1925 ($22.50)
PANEL CONFIGURATION

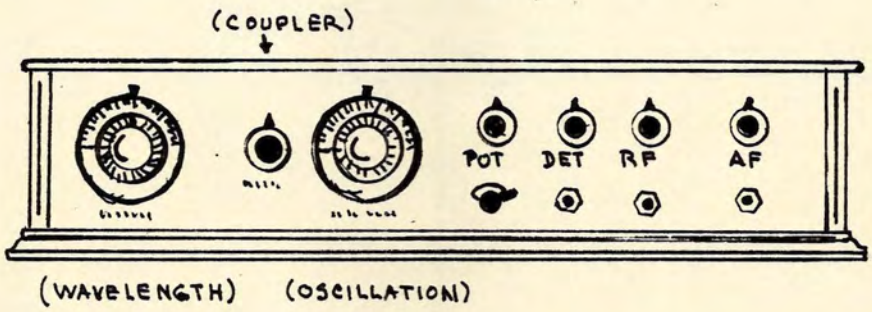

(3) SAMSON L.W XFRMRS.; FILTER XFRMR.; OSCILLATOR CPLR.

(See "INFRADYNE" MONOGRAPH.)

SARGENT-RAYMENT SEVEN, 1928; Sht. 1

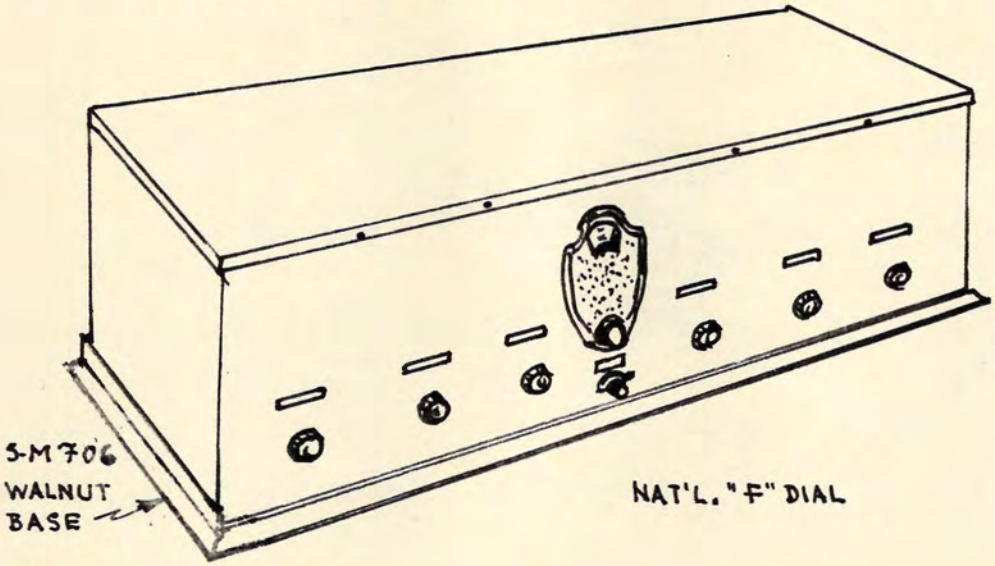

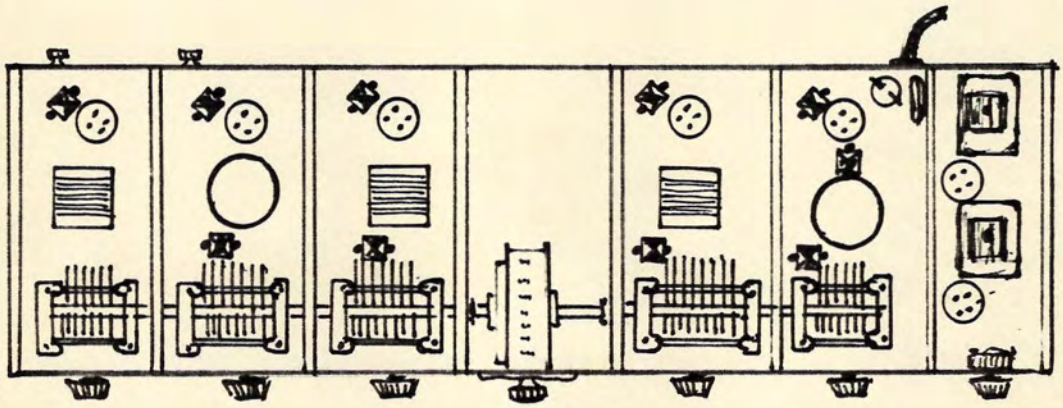

NOTES:

1. CLOUGH AUDIO SYSTEM.
2. EVOLVED FROM THE SARGENT-RAYMENT SIX.
3. AF CIRCUIT ALONE USED FOR PHONOGRAPH; CONNECTED ACROSS PRI OF 1st AF XFRMR.
4. FOUR S.G. RF STAGES; DET; 3-STAGE AF. (8) RFC.
5. REJECTOR (WAVE-TRAP) CIRCUIT; ALL STAGES TRIMMABLE.

(RW 12·8·28)

(See "INFRADYNE" MONOGRAPH.)

SARGENT-RAYMENT SEVEN, 1928

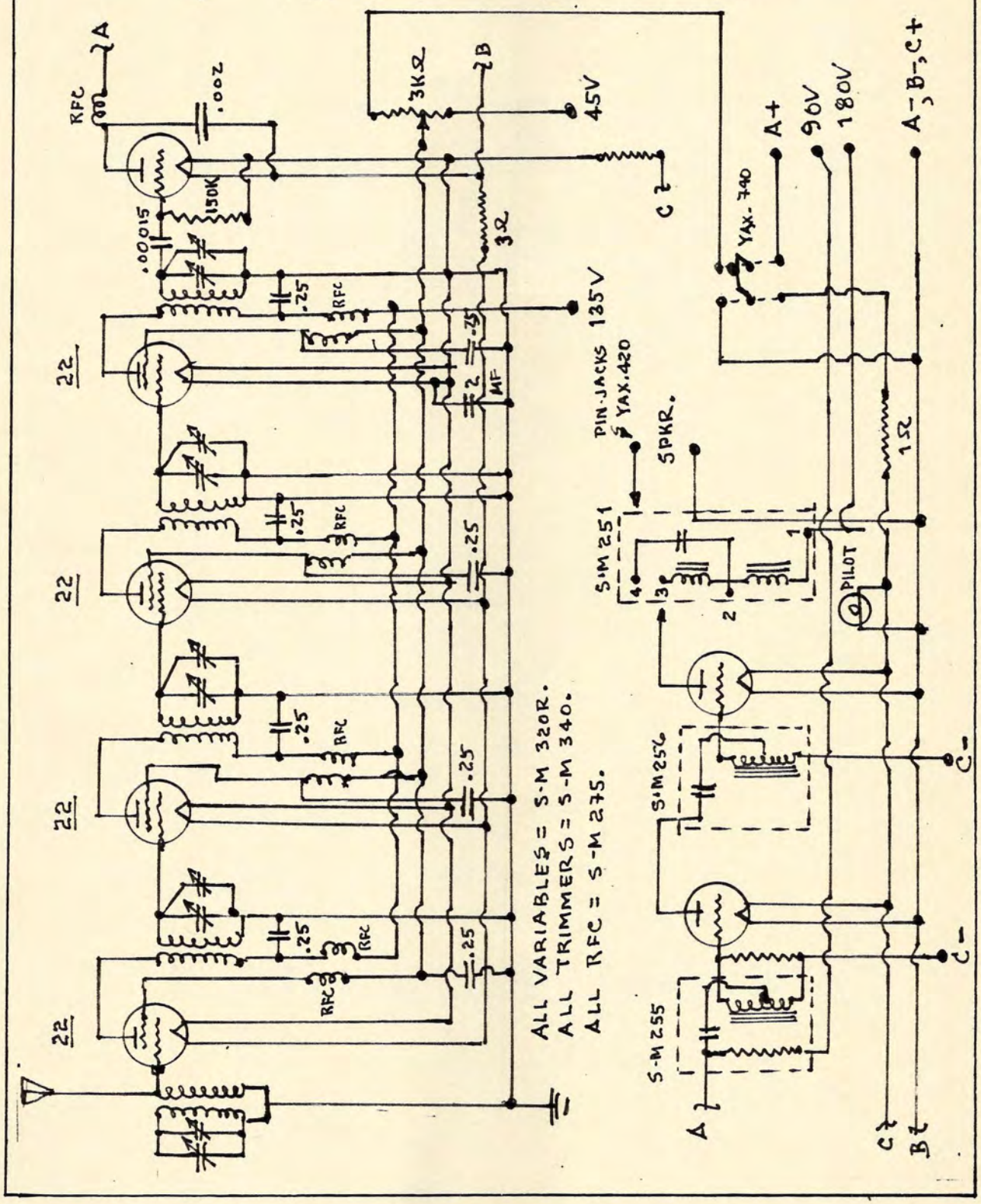

THE SCHNELL TUNER of 1926

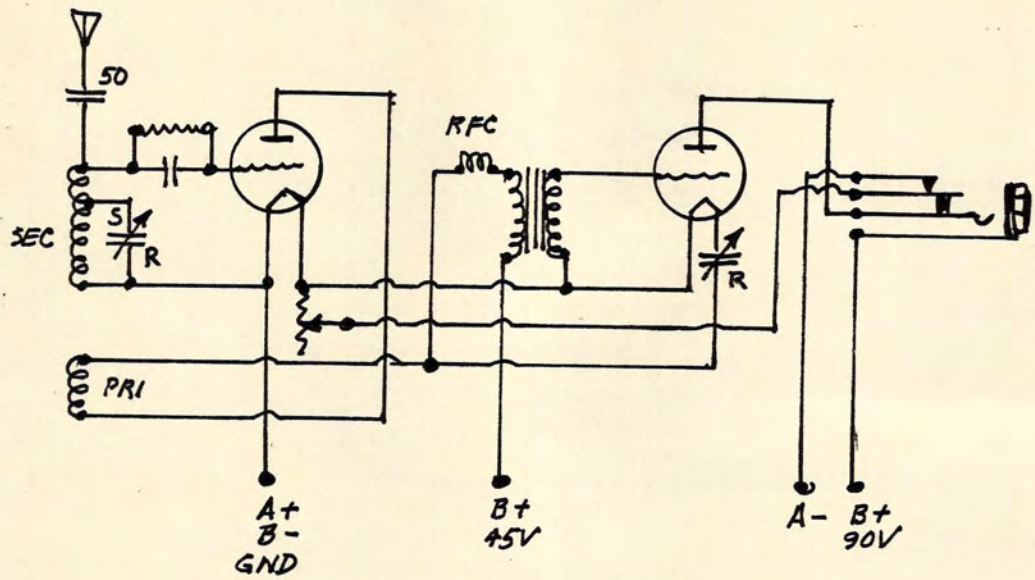

AF Xfrmr. = 10:1
(2) 01A Tubes.
11-Ohm Rheostat.
RFC = 100T #30 DCC, 1"Ø x 5" Form.
Variables = (2) 250 MMF.
Grid-Leak = 3 Megohms.
Grid Condenser = 250 MMF (.00025)

COIL DATA: SEC (Grid) = 9T #28 SCC, 3½" Ø Form. Tapt 3T from grid end; Shunt variable across remaining 6 turns.

PRI (Tick.) = 5T on same form, spaced 1/8" from SEC.

("SCHNELL" in German means quick, fast, speedy; it is also a family name in Southern Germany.)

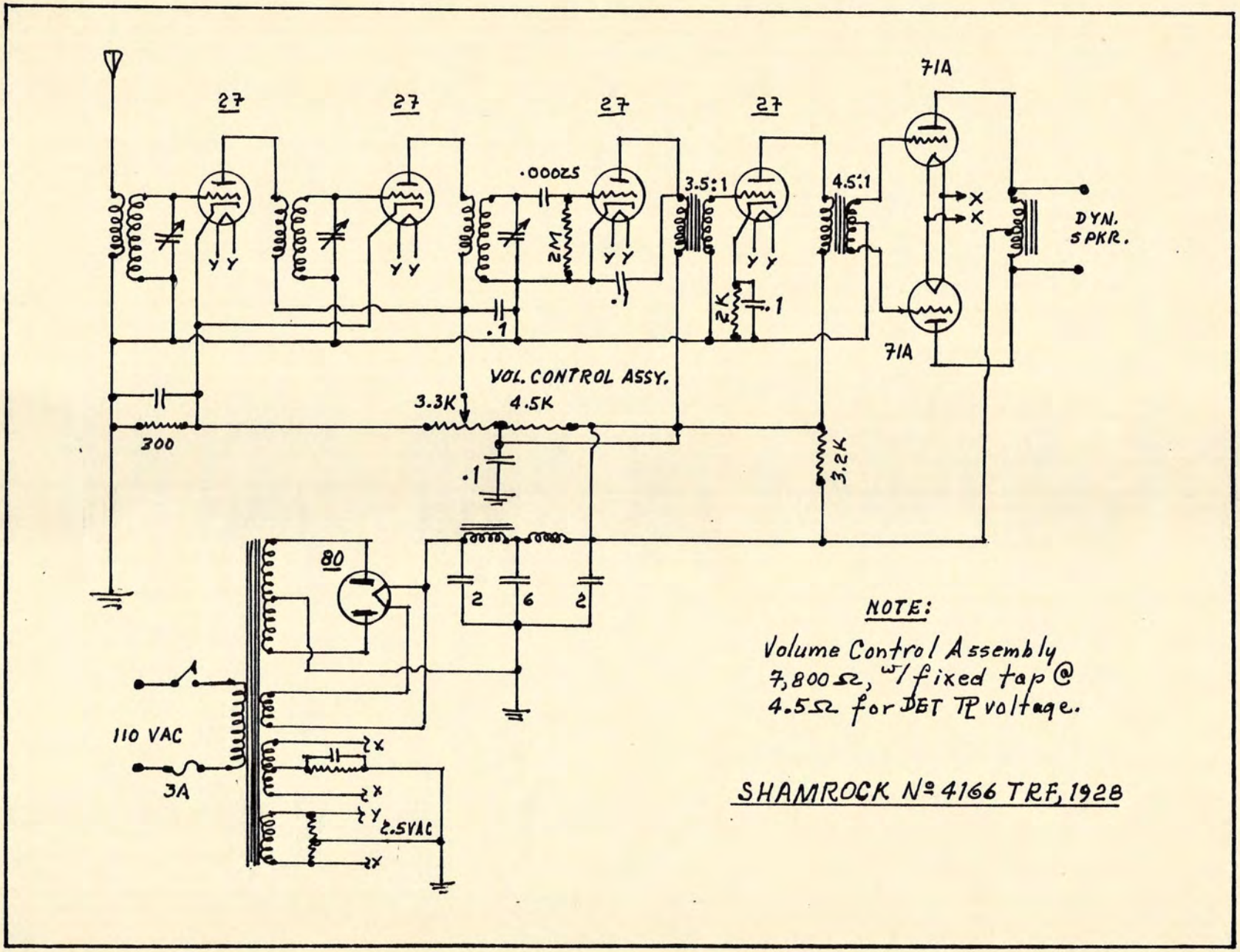
27
27
27
27
71A
71A
.00025
3.5:1
4.5:1
2M
2K
.1
.1
.1
DYN.
SPKR.
VOL. CONTROL ASSY.
3.3K
4.5K
300
3.2K
80
2
6
2
110 VAC
3A
2.5VAC
NOTE:
Volume Control Assembly
7,800Ω, w/fixed tap @
4.5Ω for DET TP voltage.
SHAMROCK № 4166 TRF, 1928

THE NON-UBIQUITOUS ST. JAMES RECEIVERS

As would be expected, there were those manufacturers in the dawn of Radio who offered all things to all men. If distance (DX) and selectivity were in vogue, or higher audio power, claims were immediately made in all media by some manufacturers offering whatever was being touted. It was ever thus, and the old Latin warning still obtains: *Caveat Emptor!*

Some fictional claims were phrased in rather erudite language by which some readers were intimidated. Others, knowing the quality of their goods, simply offered it behind their name. There were a few advances in some of the out-of-left-field offerings, however, and if later invalidation occurred due to other advances, that, too, was part of the game. One such contributor were the sets offered by St. James.

The two sets were known as the "Twin Four" and the "Upright 8", a specious distinction in as much as their circuitry was identical. Claims by St. James, in his own words:

"The receiver must be immune to signals excepting through the proper selection of channel, the loop, or coil collector. SHIELDING ACCOMPLISHES NO ADVANTAGE, and the St. James Labs have developed a new and effective way to make use of the "U" circuit. If we consider that the wiring and exposed devices in a set as being capable of picking up a portion of all electrical energy and disturbances which set up a field, it becomes apparent that such is detrimental to the receiver. A column of water in a pipe has a certain pressure existing throughout its height, but we can balance out the pressure by bending the pipe in the form of a "U". The water is now at rest and may not be affected by external pressures. Our receiver likewise is so constructed, the wiring forming a "U" by turning back upon itself so that one half of the energy opposes the other half, thus balancing out energy that might be impressed on the wiring. The advantages from this system are obvious....."

The argument was specious, of course, but apparently there exist those who will try most anything, and the St James receivers endured for a year or two. Excluding the speaker, loop, and cabinet, the "Twin Four" could have benn built in 1927 for $83.40. The "heart" of these receivers was the St. James evacuated RF transformers, four being required at $7.50 each. All other parts were conventional for the period - that is, off the shelf items from standard manufacturers.

Dr. Wm. Jelinek of Rhinelander, Wisconsin, was quite taken with the St-James "Twin Four", and restored one from the data contained within these Sketch-Books, with thanks. He was, however, disappointed in as much as the performance left something to be desired. We suggested he build an obviously better receiver, the "Ultradyne L-1".

* * *
* *

ST. JAMES TWIN-FOUR RCVR., 1927;Sht.1

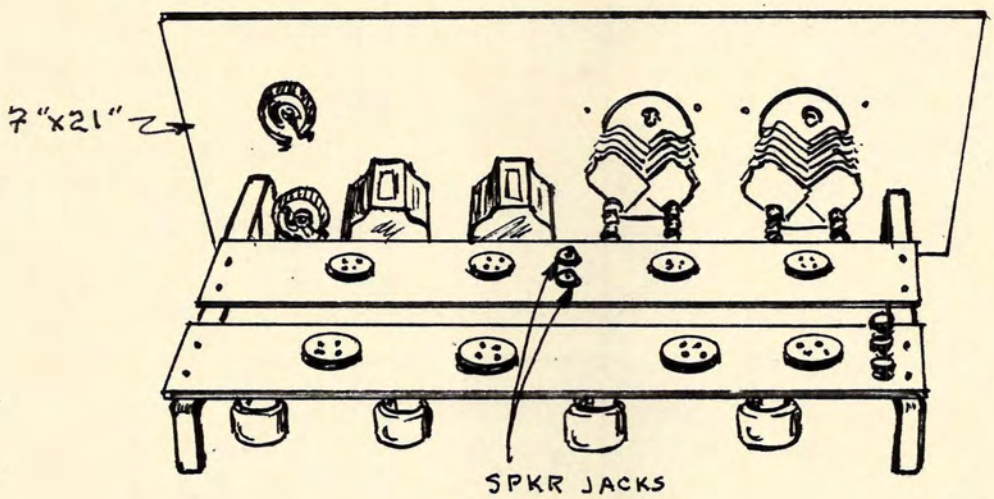

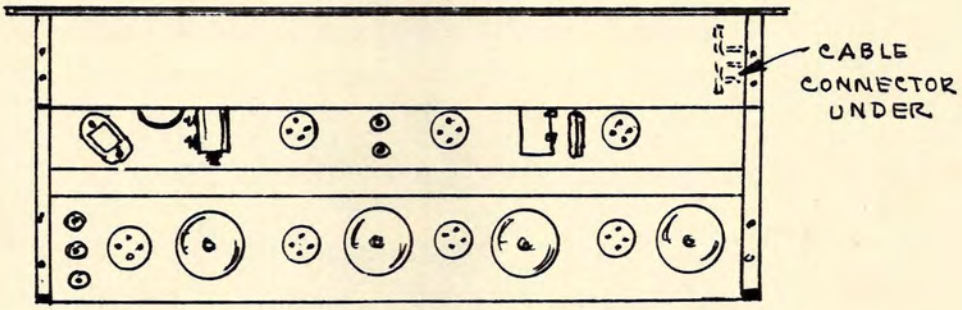

BOTTOM VIEW

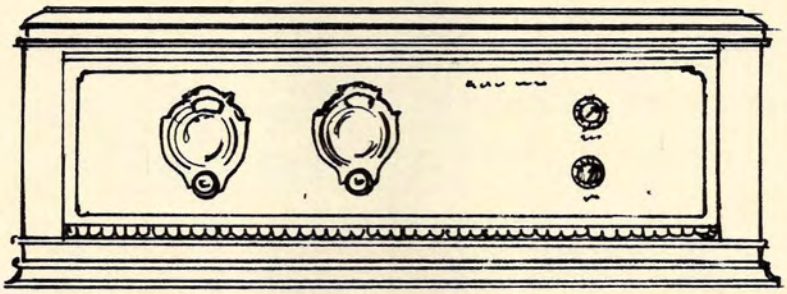

REMLER TWIN-ROTOR VARIABLES.
KURZ-KASCH DIALS.
LIGNOLE PANEL.
THORDARSON R-200 AF XFRMRS.

EHLERT
CABINET

ST. JAMES TWIN-FOUR RCVR., 1927; Sht.2

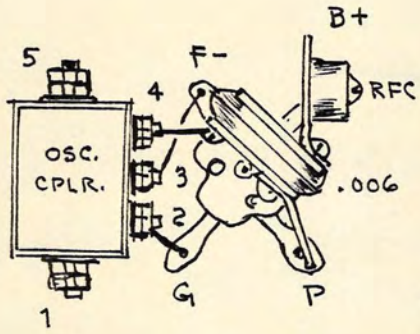

OSC. CPLR. DETAIL
(St. James Special)

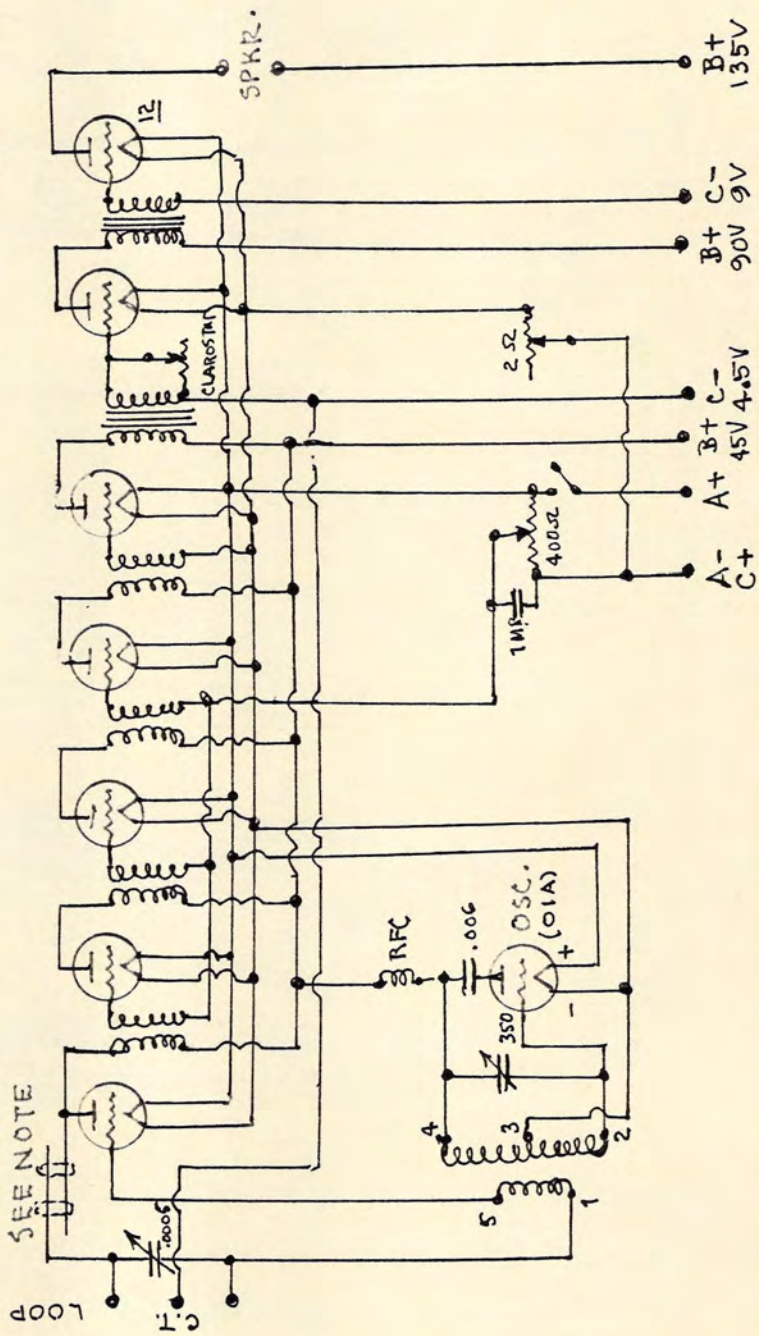

NOTES: 1. INSULATED WIRES TWISTED TOGETHER BUT NOT CONNECTED (or: 16 mmf MIDGET). WIRES 6" LONG (H).

2. CABLE COLOUR CODE:

RED = A+
BLK. = A-
YEL. = B-
BLU. = B+45V
GREY. = B+ 90V
GRN. = B+ 135V

ST. JAMES "UPRIGHT EIGHT", 1927;Sht.3

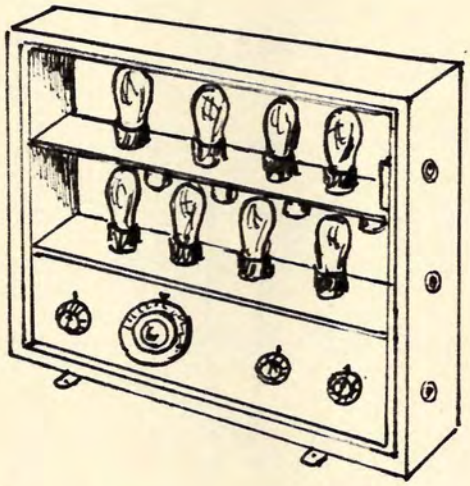

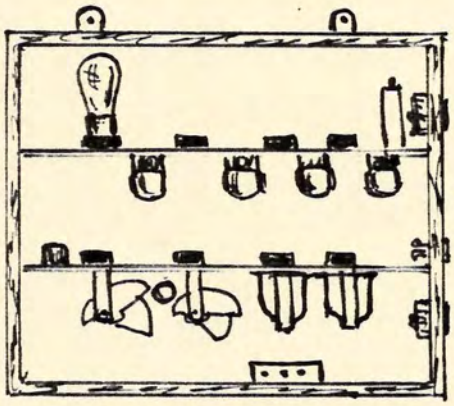

This receiver is essentially the same as the "Twin Four", the configuration being different for the sake of difference. It was an awkward item to pack about, even though it was advertised as a portable. The chief distinction of St. James was his evacuated RF transformers.

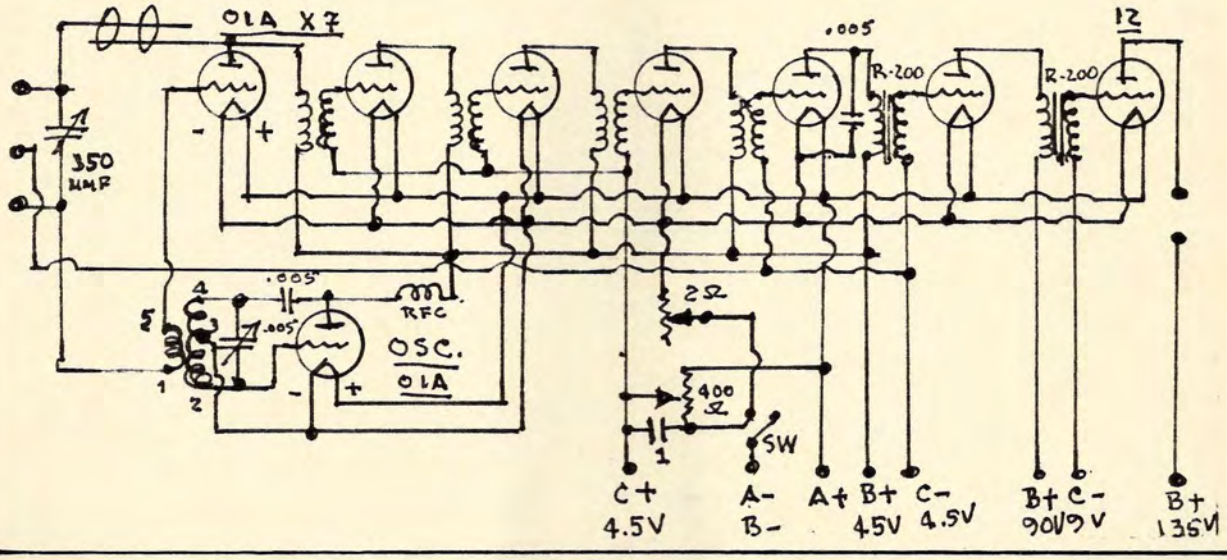

JOHN G. SHODRON's "Trap Circuit" REGENERATIVE RCVR.'25

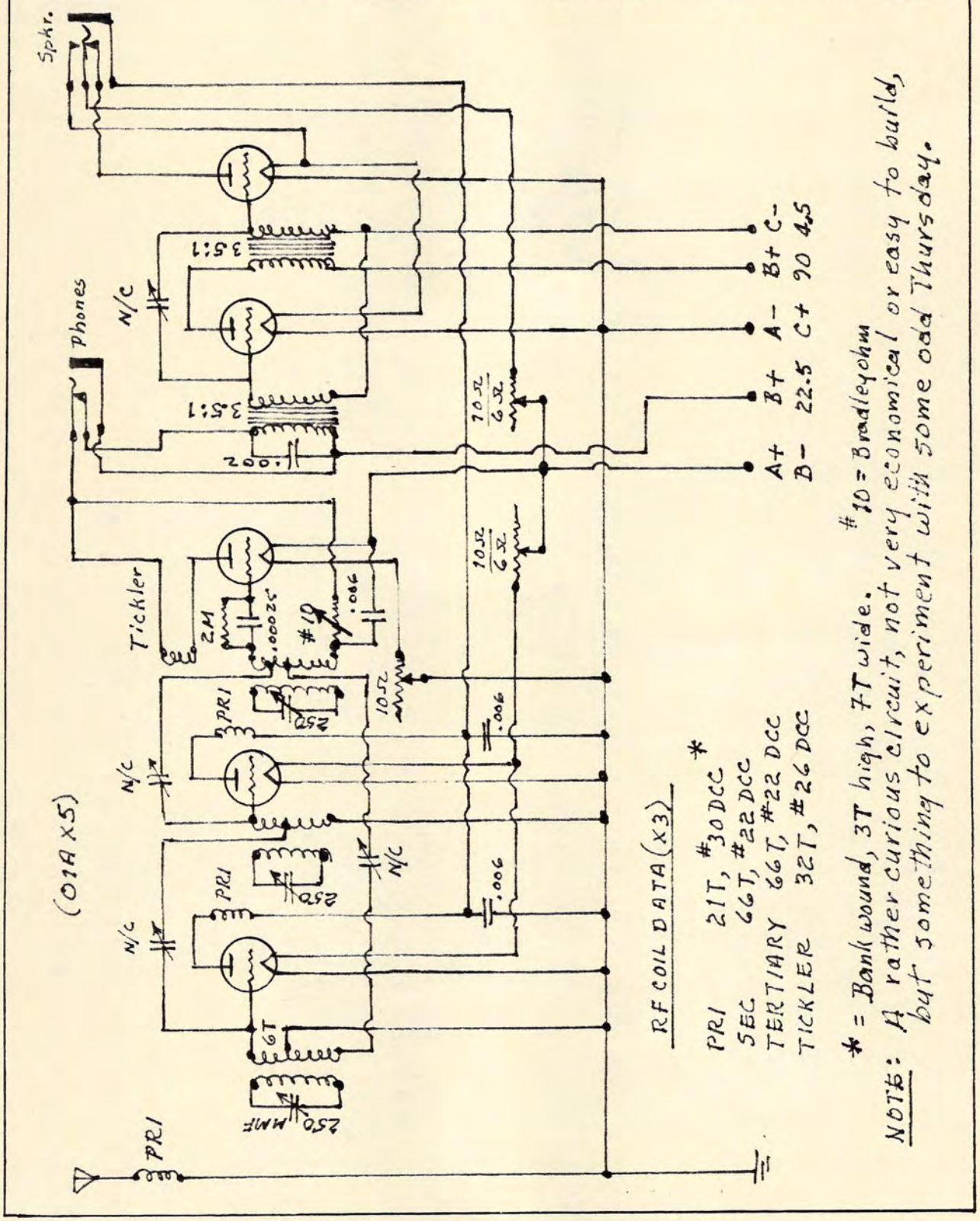

SICKLES 4-TUBE RECEIVER; 1926

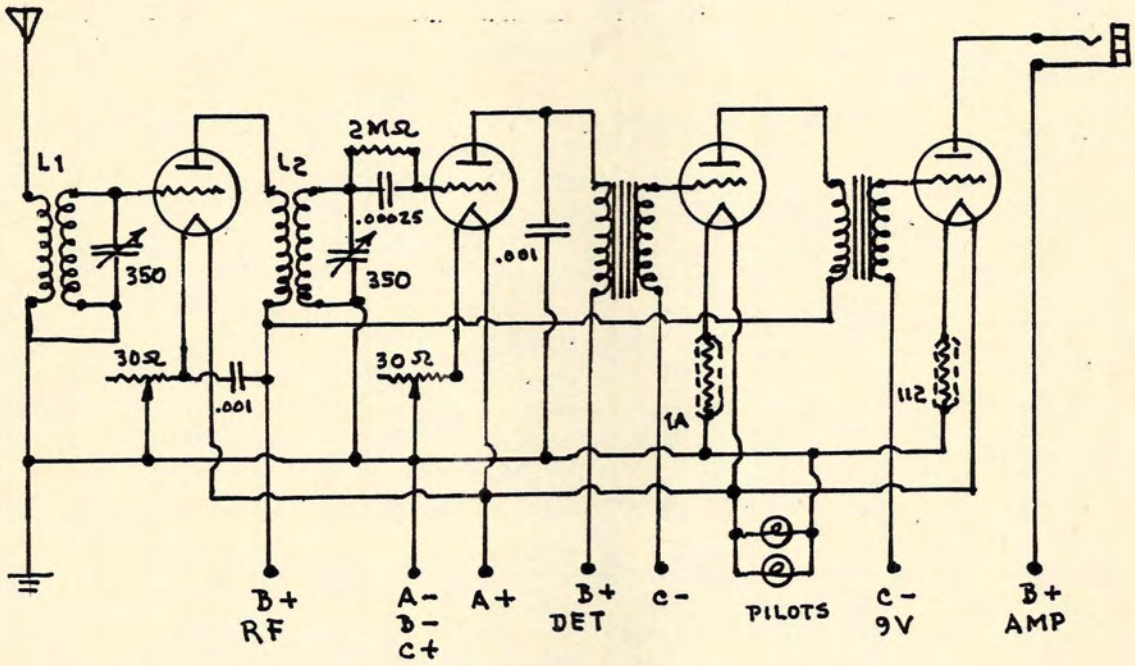

L1, L2 = SICKLES #30 SHIELDED COILS.
THORDARSON R-200 AF XFRMRS.
MAR-CO ILLUMINATED DIALS.

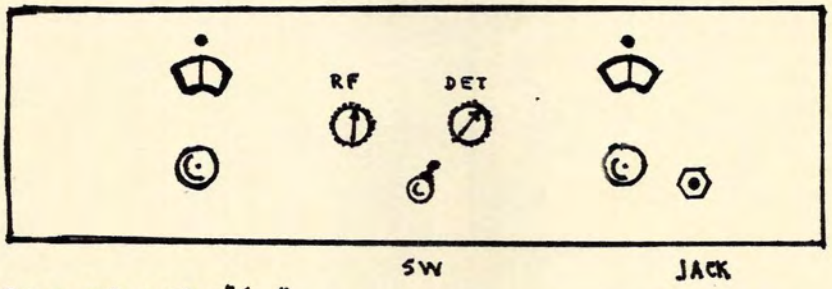

PANEL = 7"x21"x 3/16"
BASEBOARD = 9.5" x 20" x 1/2"

(RW 11·13·26)

NOTES ON SLEEPER's "MONOTROL"

The following notes apply, in general, to most any Sleeper set, as all were based on the Inverse Duplex circuitry of Grimes.

SET-UP PROCEDURES:

1. Fit loop into bracket and connect the numbered cords to their corresponding posts inside set.
2. Connect batteries; seperate battery for DET.
3. Place DET tube in socket furthest right.
4. Turn AMP and DET knobs fully CCW.
5. Set loop switch, or VOL control, mid-point.
6. Plug in phones or speaker; LH jack for 3-tube operation; RH jack for all tubes.
7. Pull our button switch at bottom of panel.
8. Turn AMP knob CW until tubes light.
9. Turn DET knob until rushing noise is heard.
10. Retard DET knob until noise ceases. The DET tube is now at its most sensitive point.

    NOTE:

    The DET tube will burn brighter than the amplifier tubes.
11. Rotate the large dial until a signal is heard.
12. If no signal is heard, change loop switch setting; then rotate loop for best reception.

TROUBLE-SHOOTING THE "MONOTROL":

SET IS DEAD:
1. Set connected improperly.
2. Something is disconnected.
3. An inoperative tube.

SET HOWLS:
1. Loop switch too far to the right.
2. DET tube defective.
3. B-batteries run down.
4. A seperate battery for the DET tube was not used.

WEAK SIGNALS:
1. Run down batteries.
2. Loop terminals reversed.
3. Poor tubes or tube contacts.
4. Reversed speaker terminals.

CRACKLING NOISES:
1. Defective tubes.
2. Loose connexions.
3. Run down batteries.
4. External electrical disturbances - e.g., car ignition, power lines, etc.

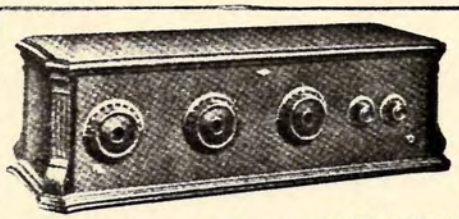

SPLITDORF RECEIVER

The Splitdorf Polonaise, a more modest design, employing the Splitdorf patented circuit. Fundamentally there is only one type of receiver in the entire Splitdorf line

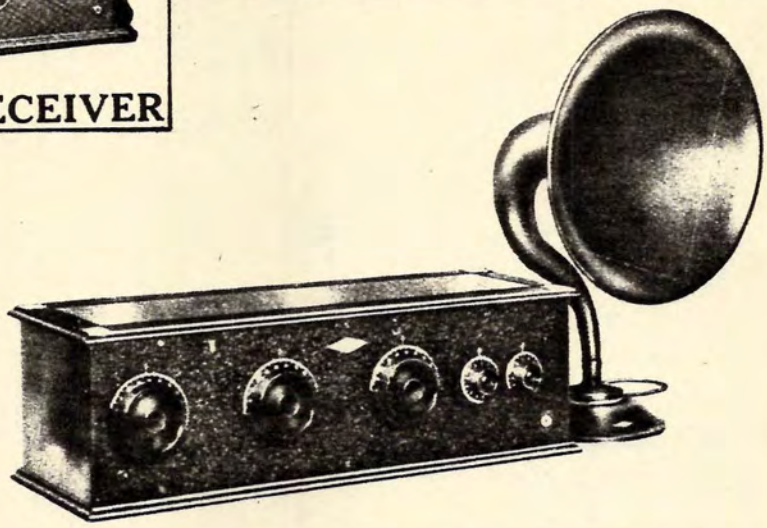

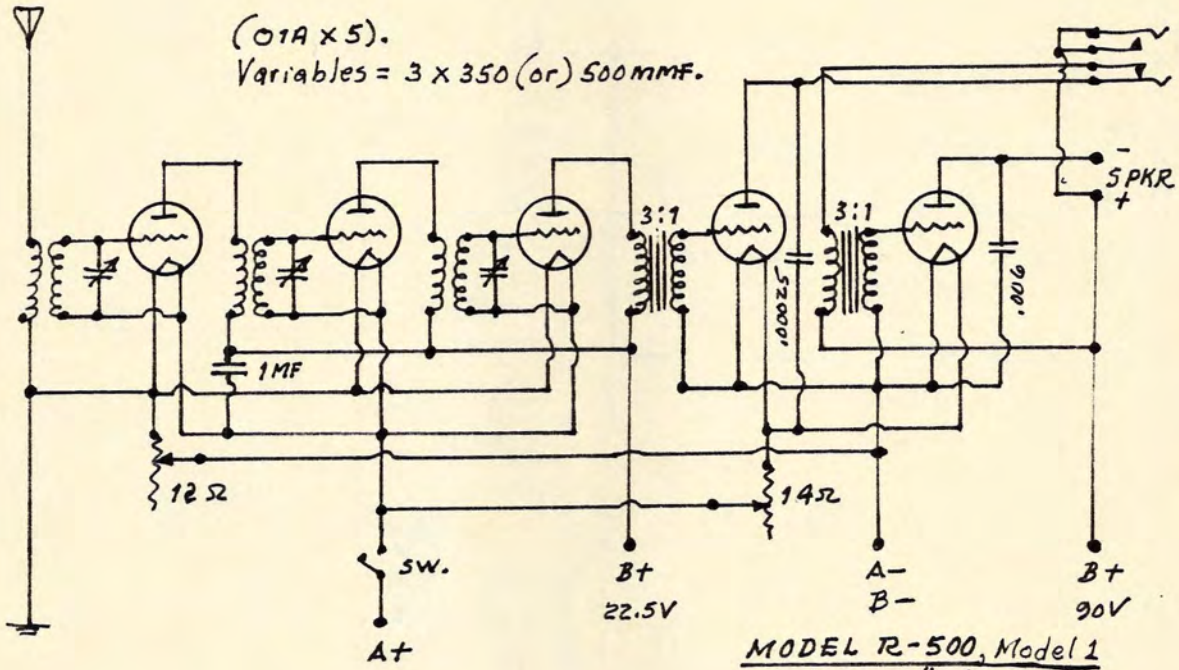

MODEL R-500, Model 1
"Polonaise" (1924)

MISC. SPLITDORFF NOTATIONS - Model R-500 (Model 2)

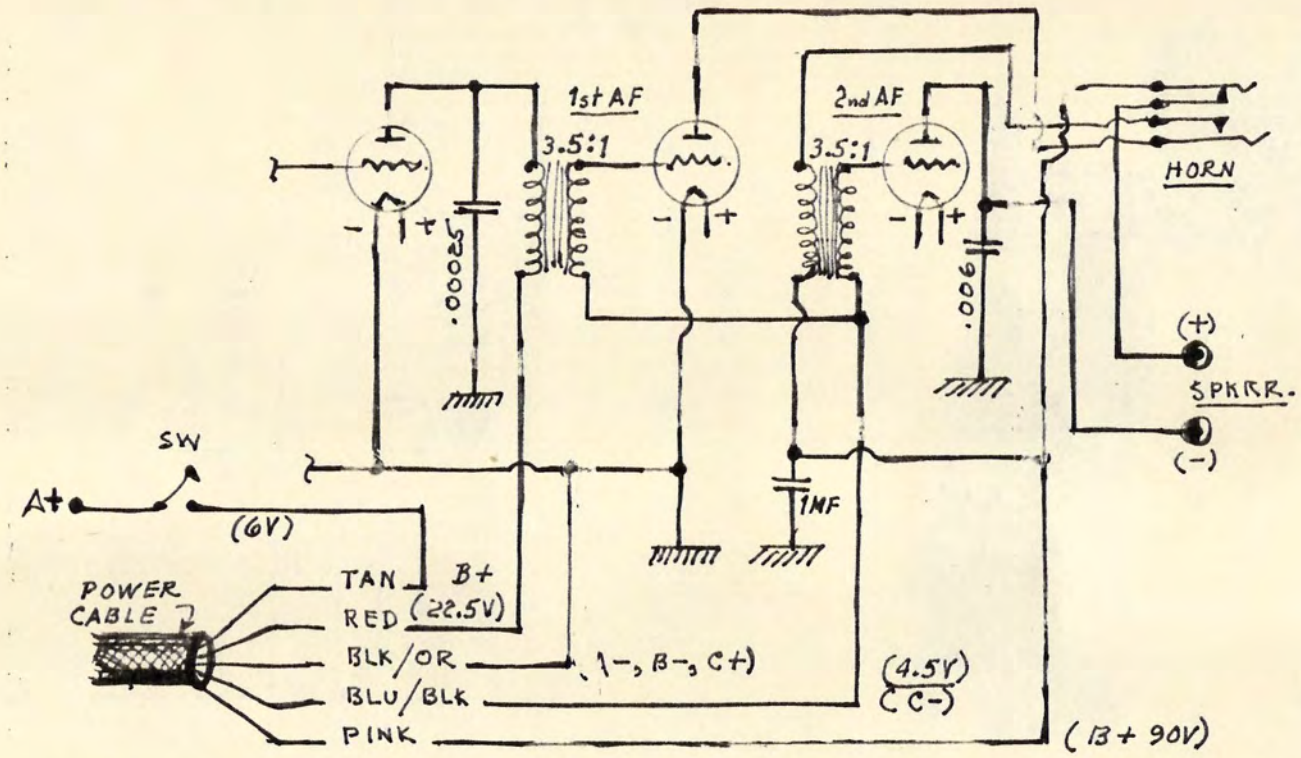

= Metal sub-panel brackets, connected to A- leg @ power input, & acting as a conventional GND.

If 01As are used, B+22.5V should be increased to B+45V, & C- 4.5V to -9V; cut-&-try for best audio quality.

GND (Earth) may (or not) improve signal-to-noise ratio.

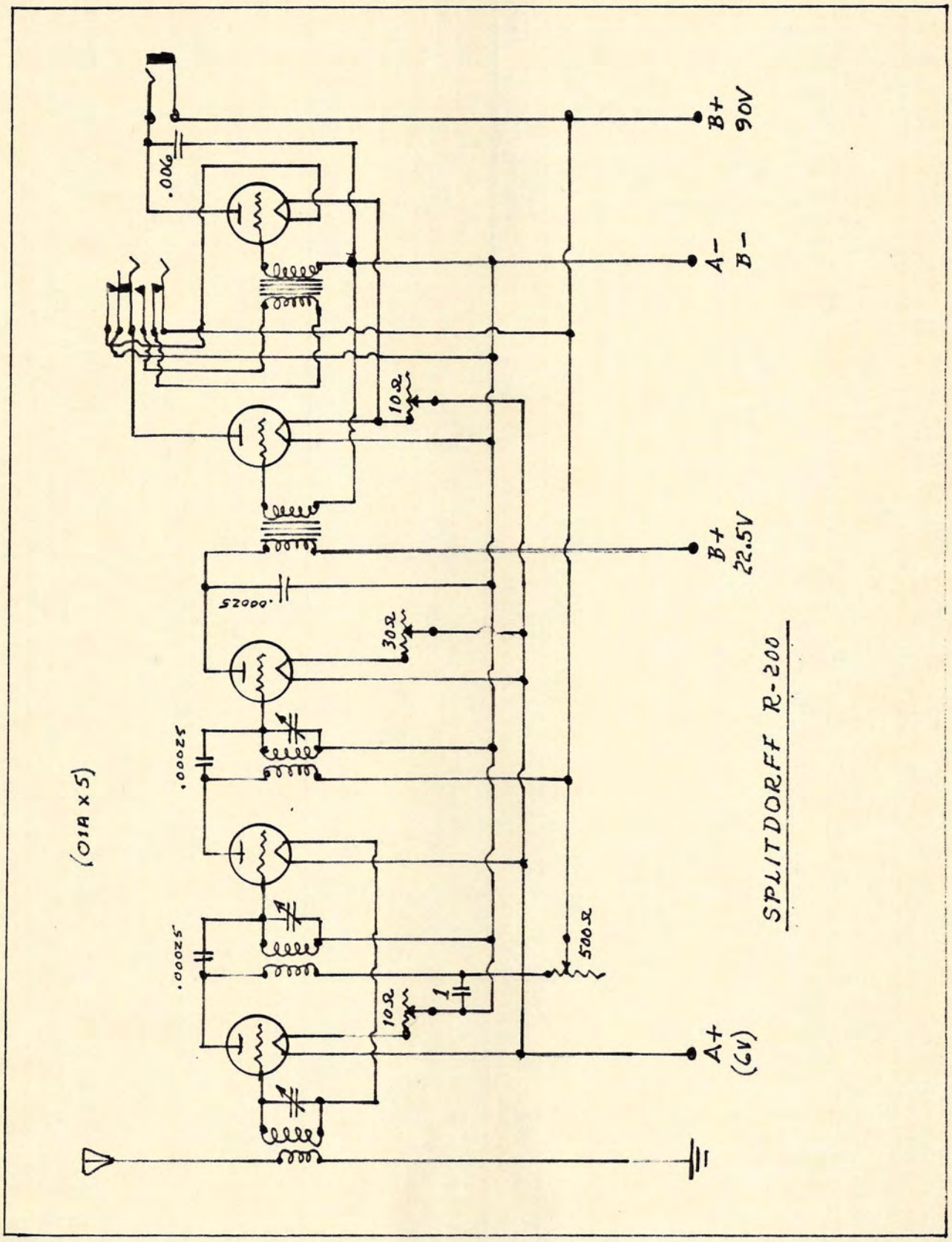
B+
90V
A-
B-
B+
22.5V
A+
(6V)
.006
10Ω
30Ω
.00025
.00025
.00025
10Ω
1
500Ω
(01A x 5)
SPLITDORFF R-200

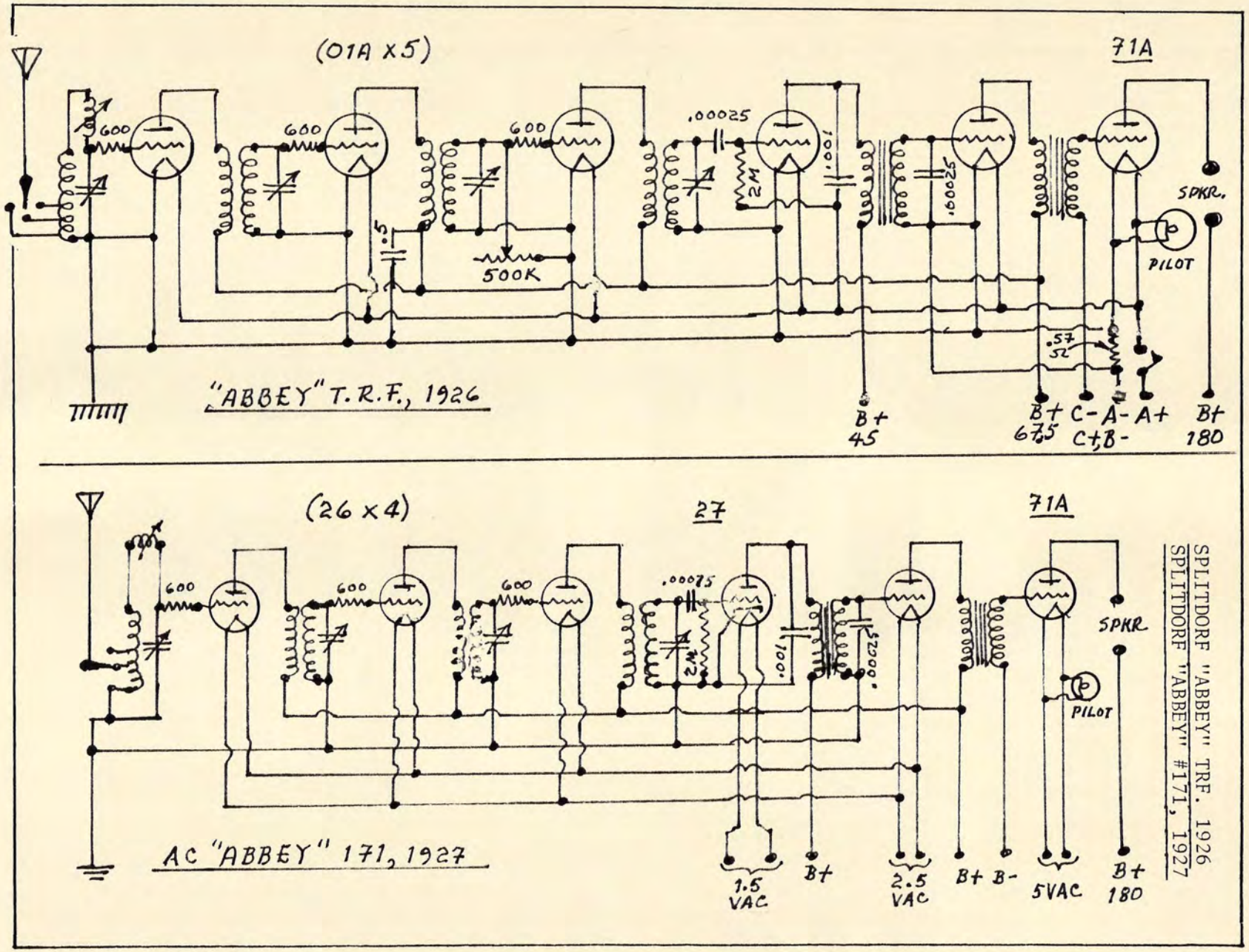

SPLITDORF "ABBEY" TRF. 1926
SPLITDORF "ABBEY" #171, 1927

The
SPARTON
RADIO

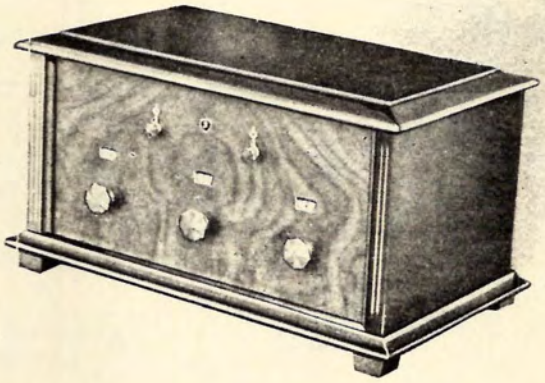

Model 5-26

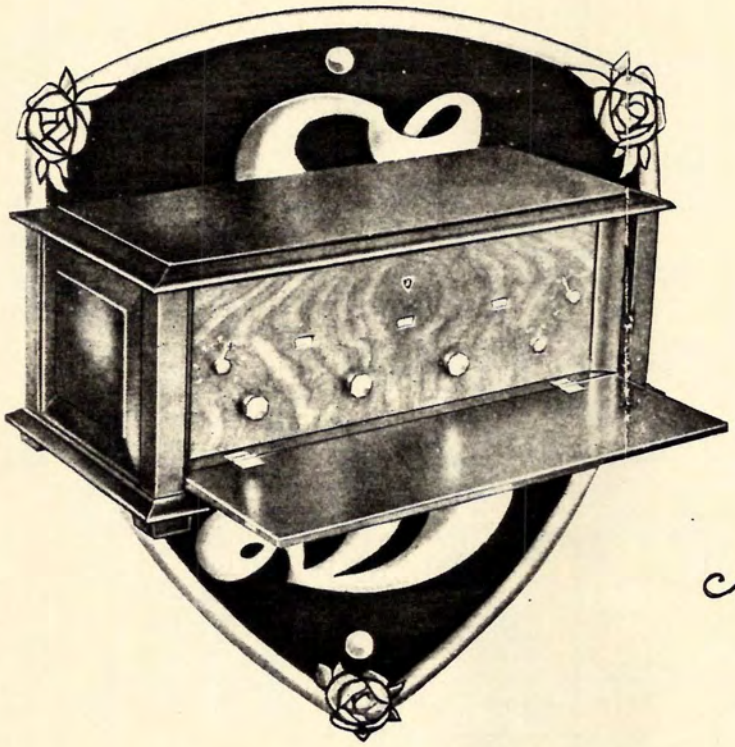

Model 5-15

(1926)

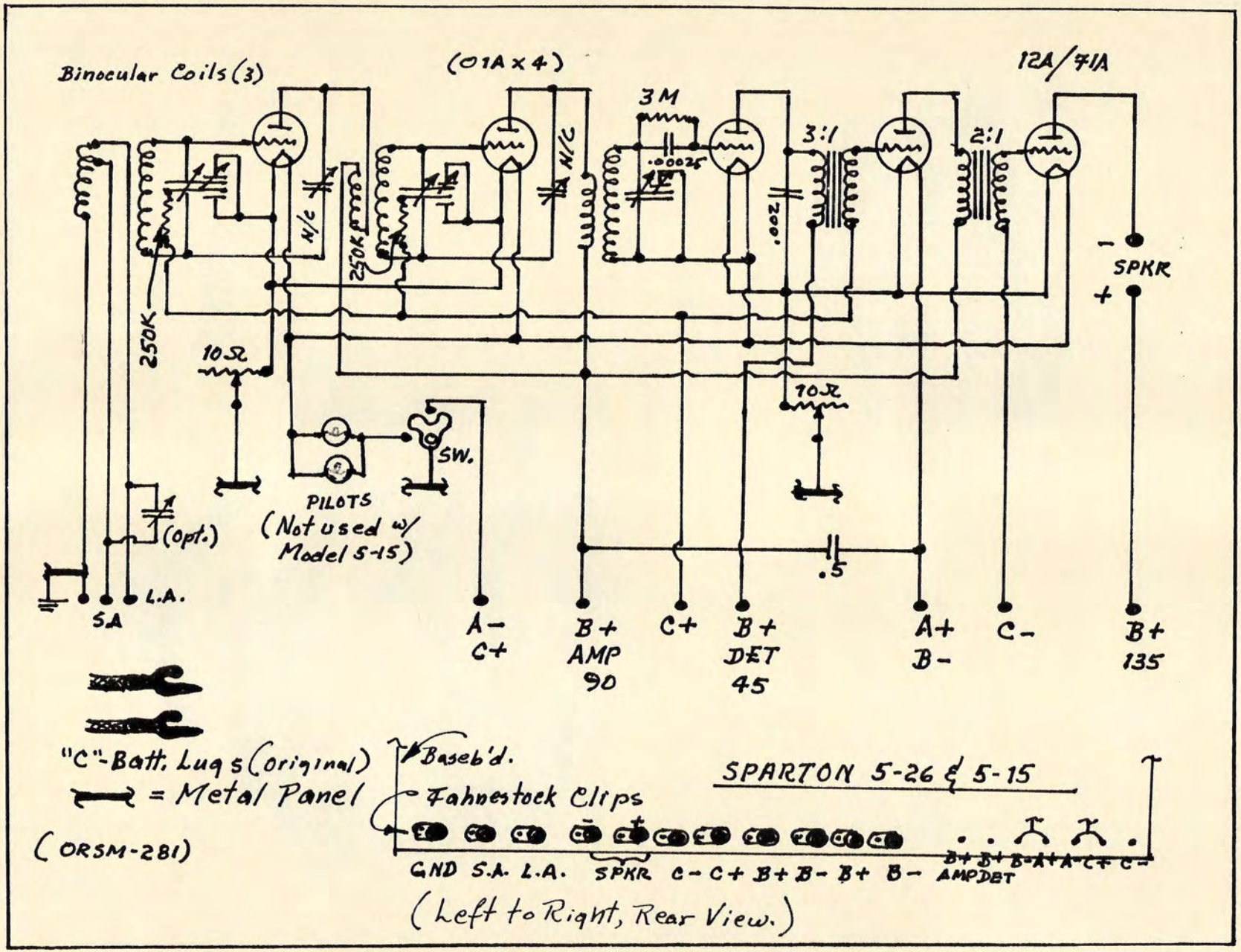
Binocular Coils (3)
(01A x 4)
12A/71A
3M
.00025
3:1
2:1
.002
N/C
250K
10Ω
SW.
PILOTS
(Not used w/ Model 5-15)
(Opt.)
.5
SPKR
S.A
L.A.
A-
C+
B+
AMP
90
C+
B+
DET
45
A+
B-
C-
B+
135
"C"-Batt. Lugs (original)
= Metal Panel
(ORSM-281)
Baseb'd.
Fahnestock Clips
SPARTON 5-26 & 5-15
GND S.A. L.A. SPKR C- C+ B+ B- B+ B-
B+ B+ B- A+ A- C+ C-
AMP DET
(Left to Right, Rear View.)

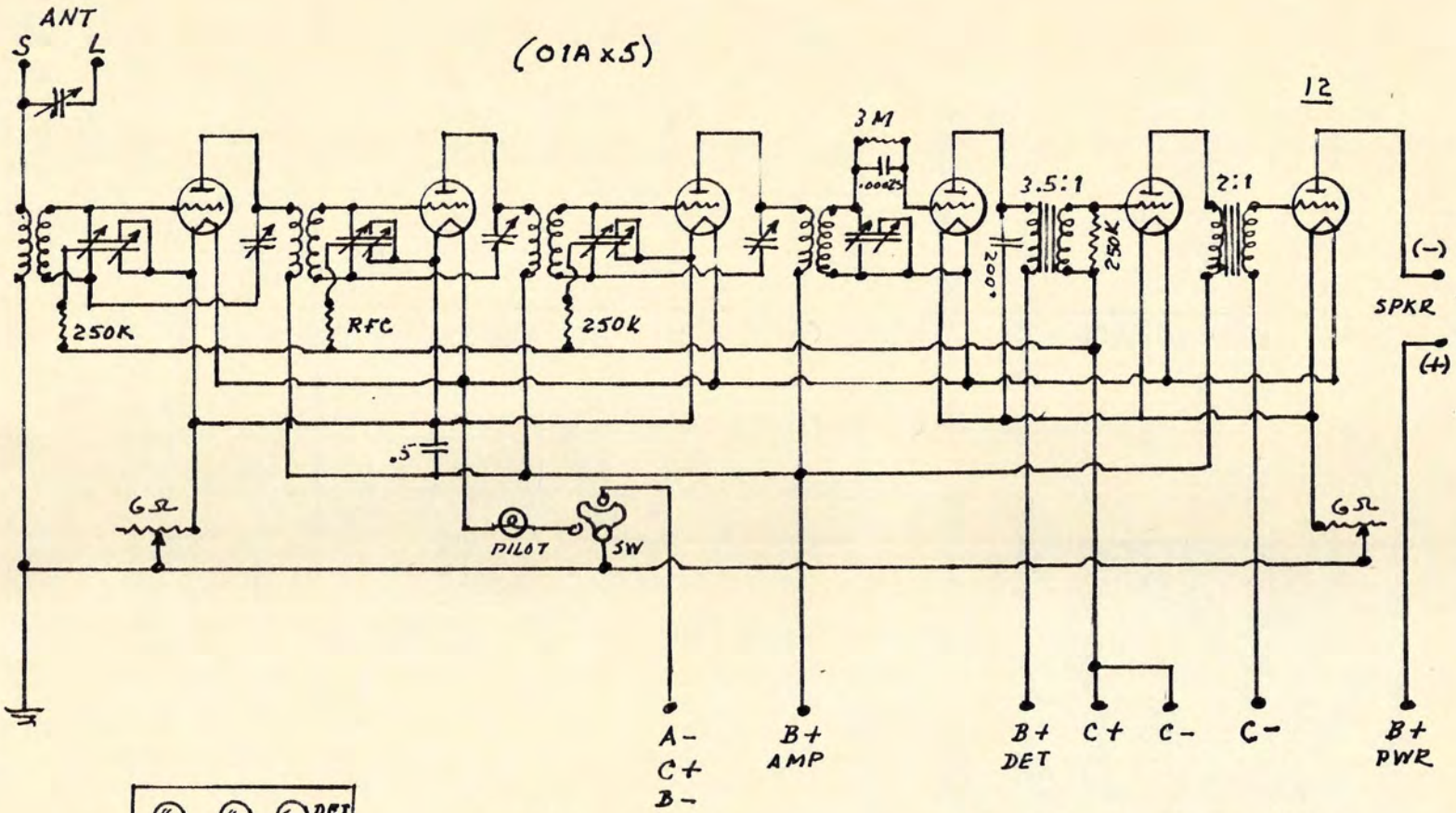

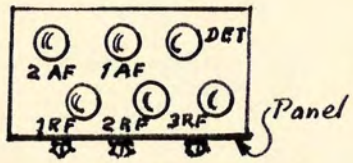

PLAN

(ORSM-278)

NOTE:
Sparks-Withington used an odd padder configuration. They may be treated in a conventional manner.

SPARTON Models 6-15 & 6-26

Model 6-26 identical, except that pilot & AF rheostat have been added to Model 6-15.

"STANDARDYNE" REFLEXED VERSION MULTIVALVE, 1926

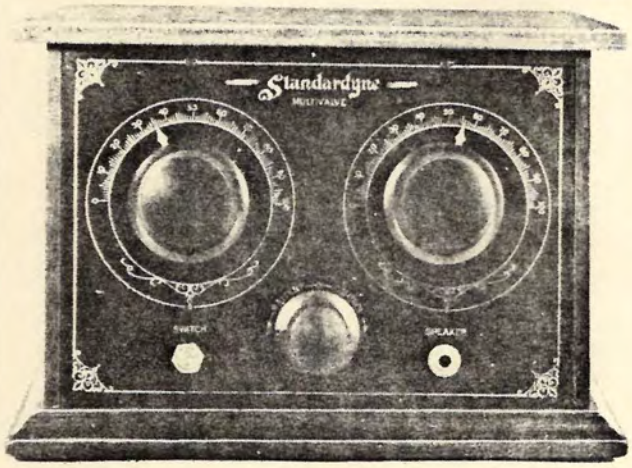

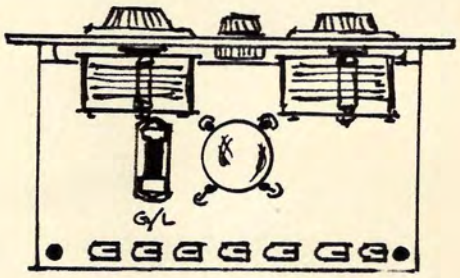

TOP VIEW

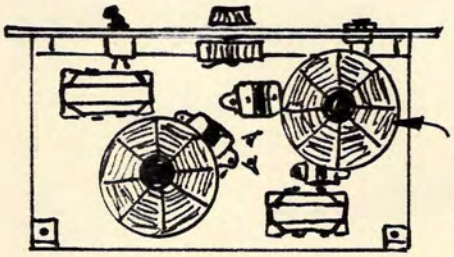

Spider-Web Coils w/ Fibre Cover

BOTTOM VIEW

(See Vol. VII for Valve connexions.)

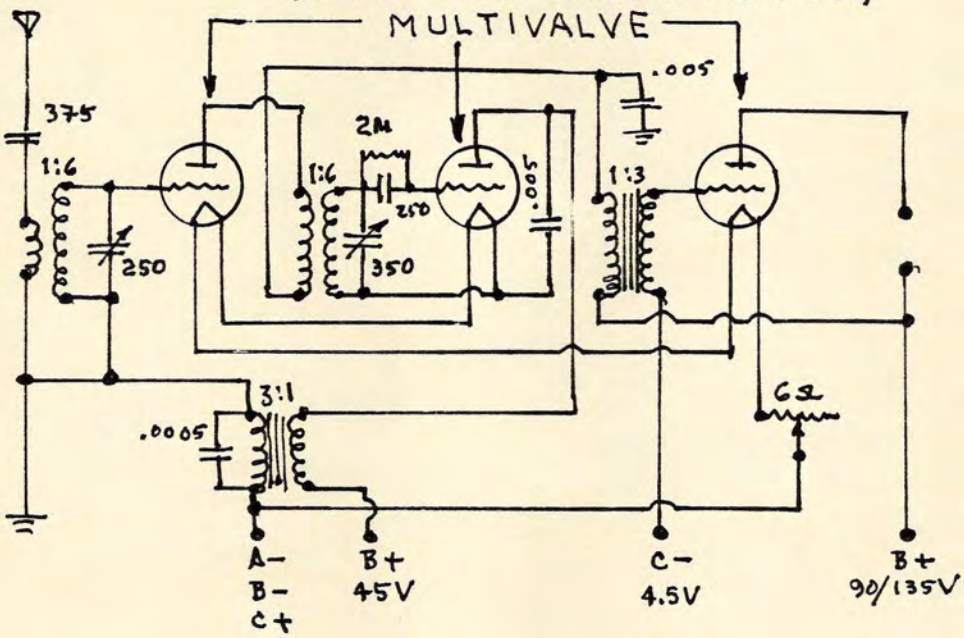

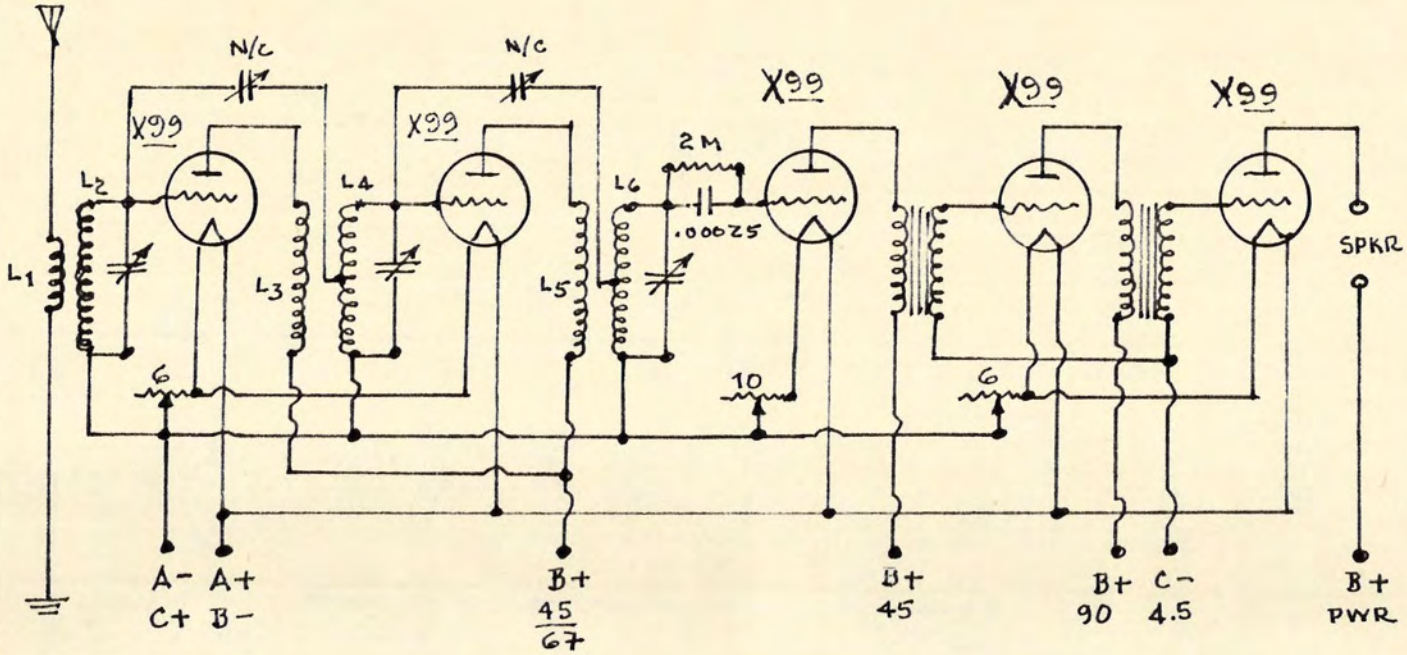

COIL DATA: L_1, L_3, L_5 = PRI 8T #22 DCC
L_2, L_4, L_6 = SEC 55T #22 DCC

PRI WOUND OPPOSITE TO SEC.

L_4 & L_6 TAPT @ 15th TURN FROM "F" END.

COIL FORMS = 2 7/8" ⌀ x 4".

5-TUBE STANDARD NEUTRODYNE CIRCUITRY, Sht. 1

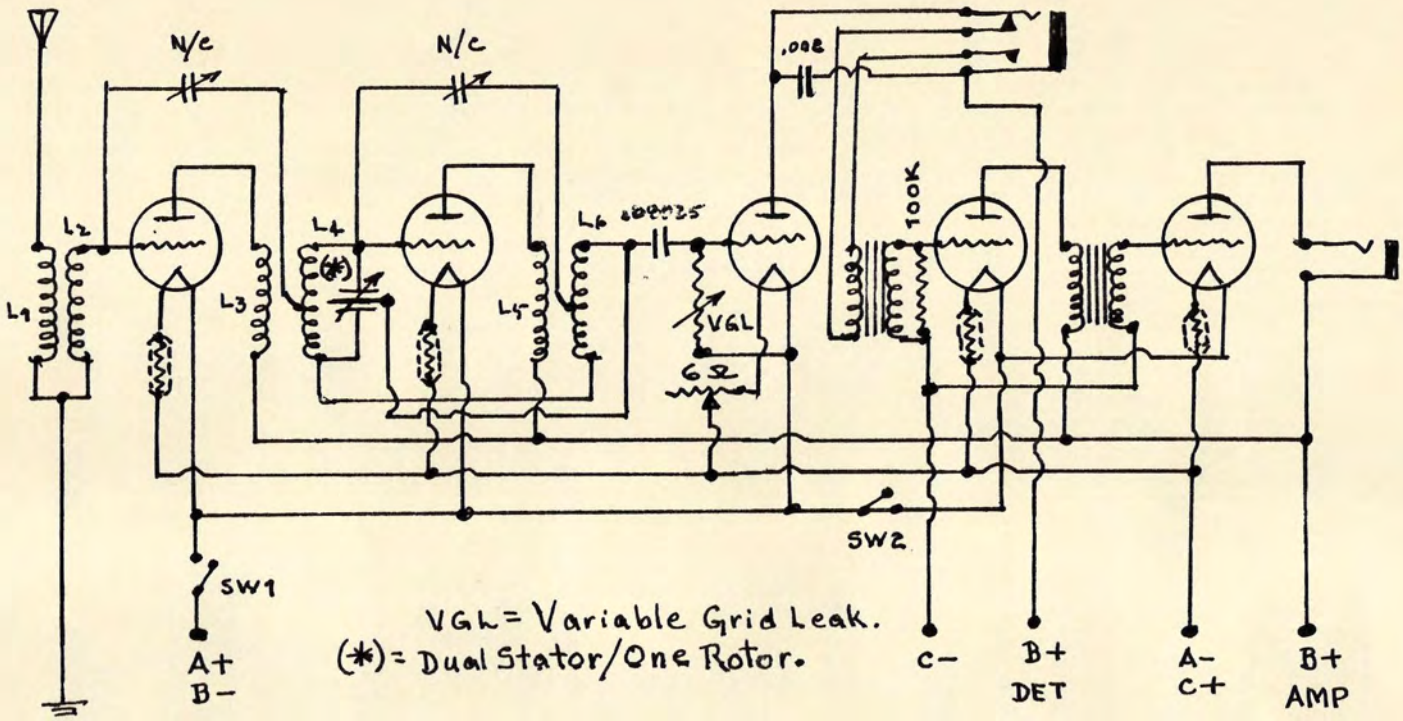

VGL = Variable Grid Leak.
(*) = Dual Stator/One Rotor.

COIL DATA: L_3, L_5 = PRI 12T # 22 DCC.
L_4, L_6 = SEC 45T # 22 DCC.

SPACING = 1/8" BETWEEN WINDINGS.

SEC IS TAPT @ 12T, THEN 33T MORE.

COIL FORM = 3"Ø x 4".

5-TUBE STANDARD NEUTRODYNE CIRCUITRY, Sht. 2

5-TUBE STANDARD NEUTRODYNE CIRCUITRY, Sht. 3

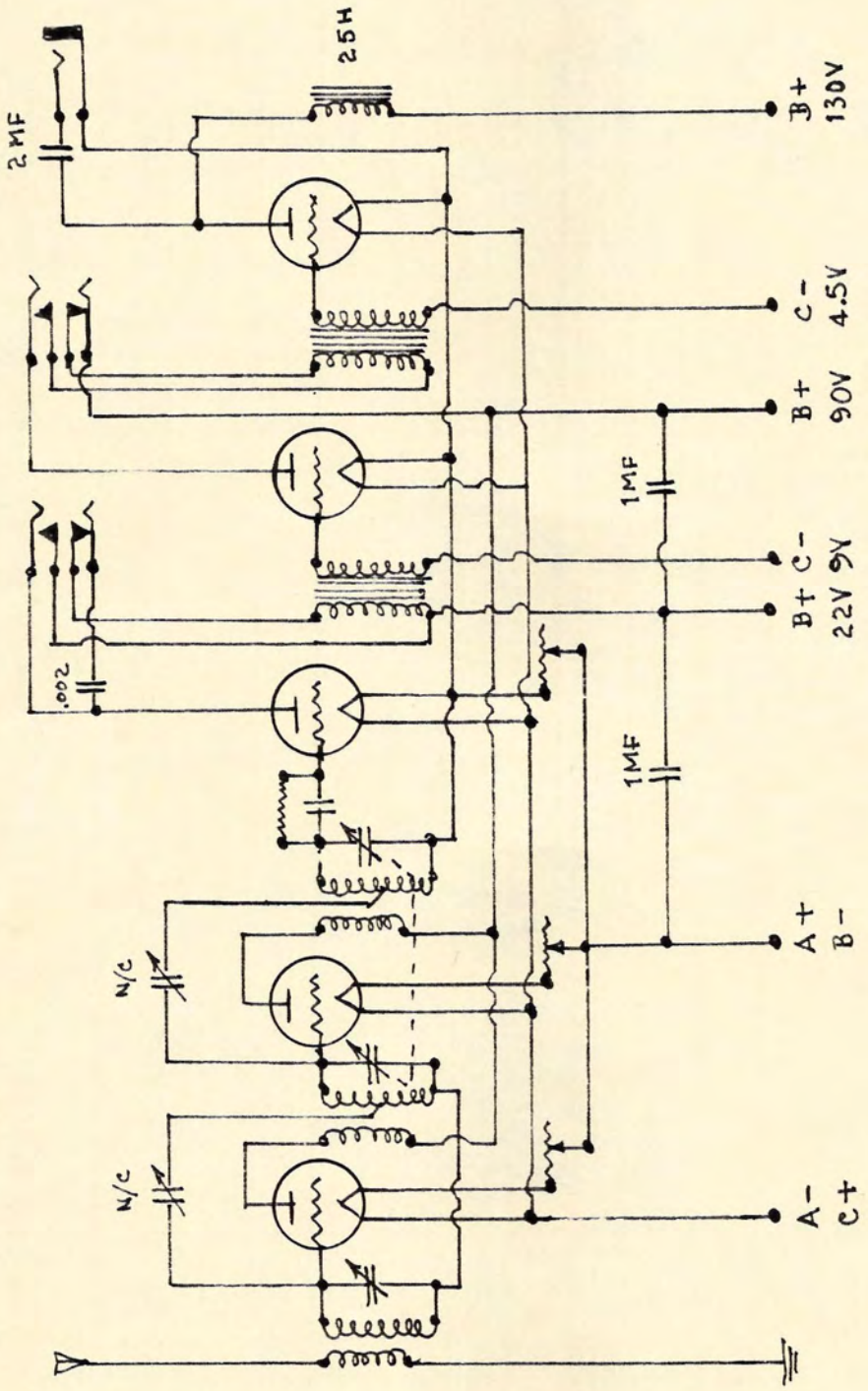

STERLING MINIATURE RECEIVER; 1928:Sht.1
SCREEN-GRID TUBES

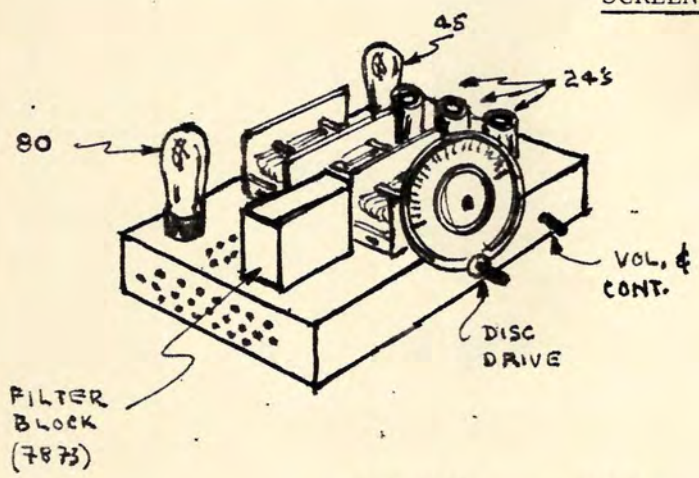

1. This set was prone to hum. Check the DFT circuit; switch 24 tube.
2. For excessive regeneration, check position of grid wires - may be too close together.
3. Check .015 condenser on centre of Fuse panel and/ or for an open .25 MFD.
4. Dial and disc—drive were Precise #7866 or General Instrument #7867, if Sterling #7811 is not used

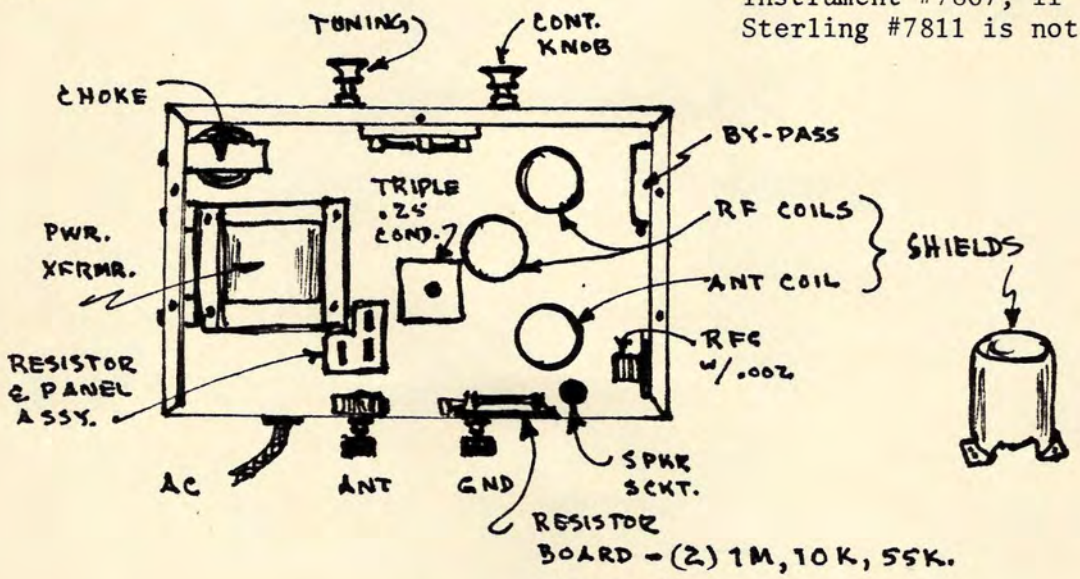

5. VOL control and AC switch were one unit.
6. Coil data: ANT coil was Precise #7829/G.I.#8010.
   RF coils were Precise #7830 (2).
7. Variables were Precise #7832/G.I.# 7872.
8. Speaker cable = 20.5" minimum from set.
9. All condensers were in 2 wax-sealed blocks.

NOTE: This was not too keen a receiver.

STERLING MINIATURE RECEIVER: 1928;Sht.2

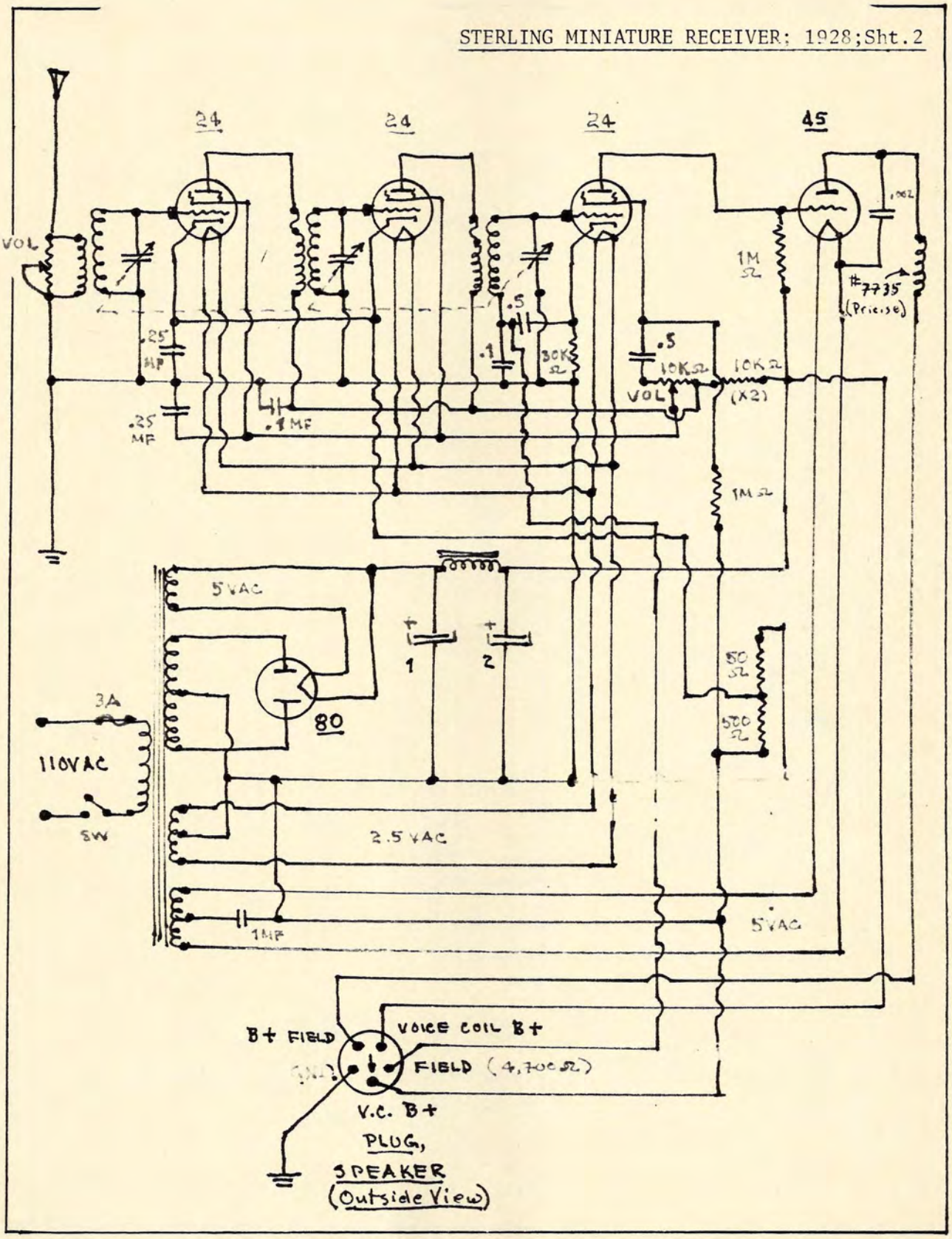

STEWART-WARNER Models R-100-A/-B/-C;Sht.1

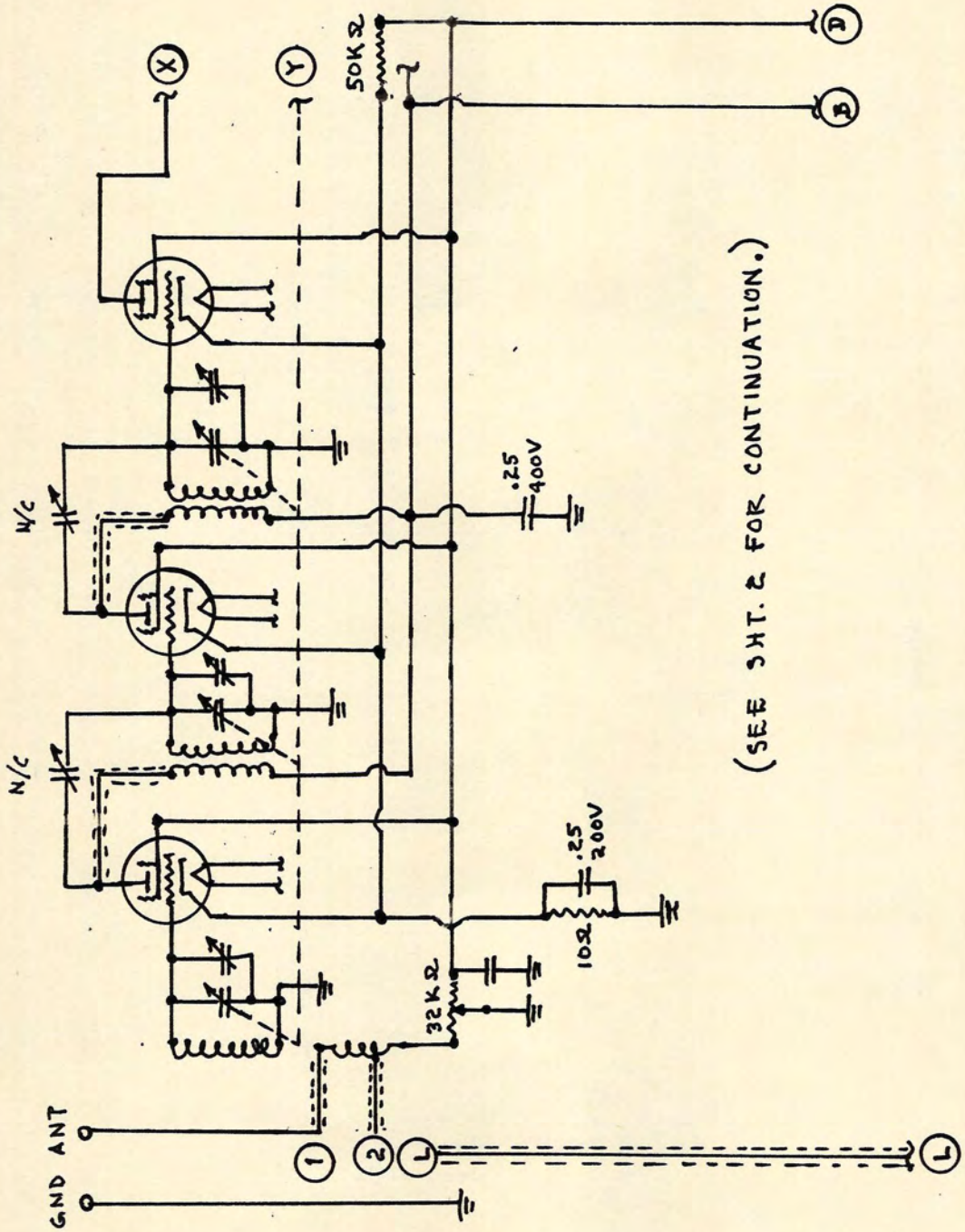

(SEE SHT. 2 FOR CONTINUATION.)

STEWART-WARNER Models R-100-A/-B/-C

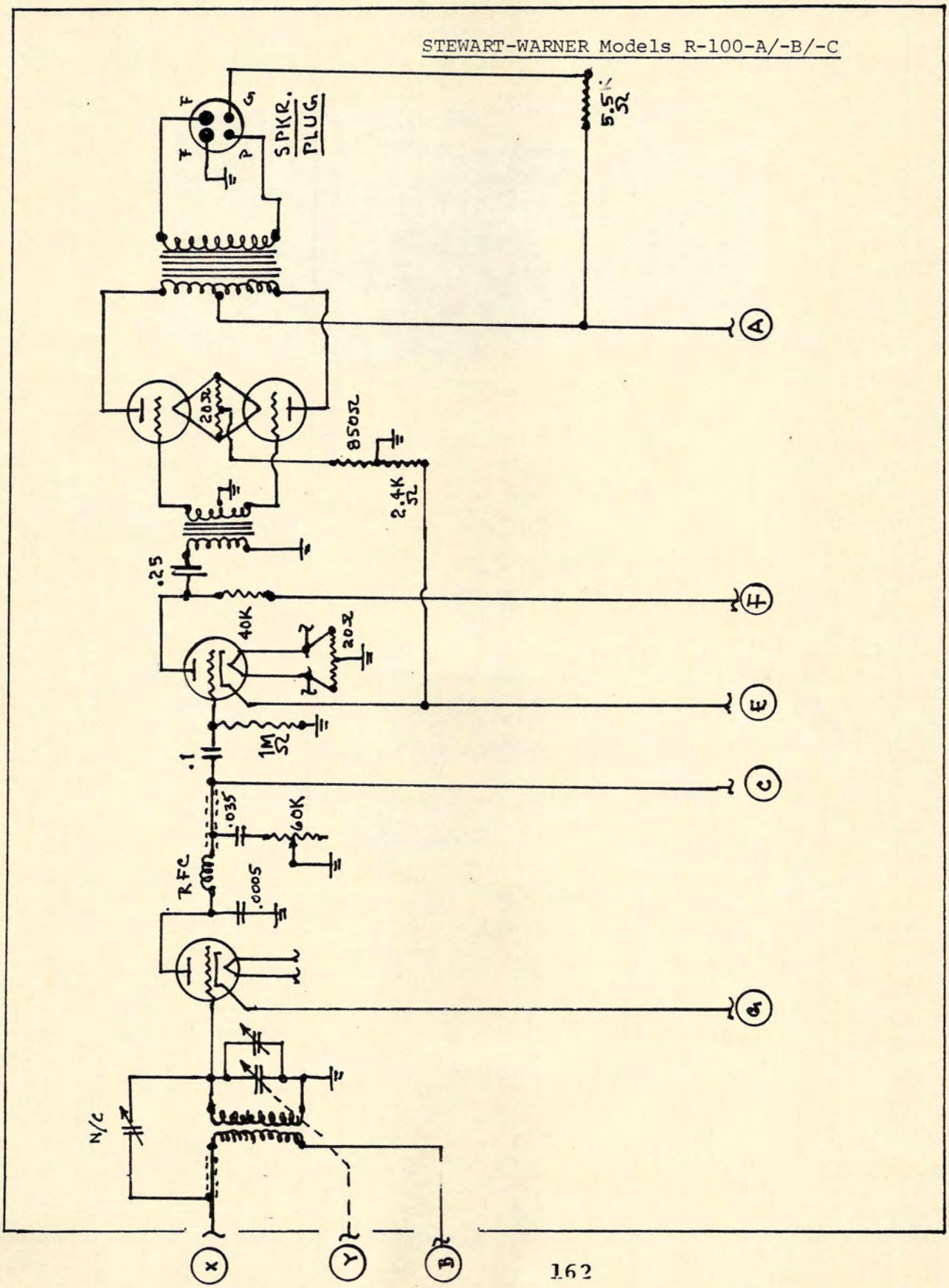

STEWART-WARNER Model 325 TRF, 1925

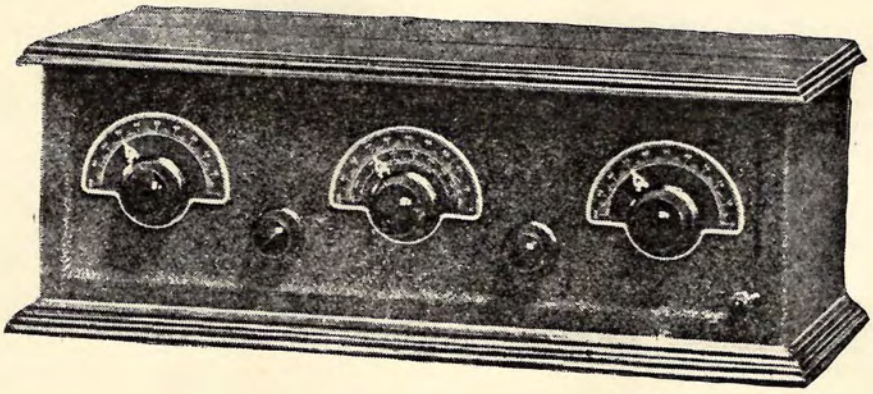

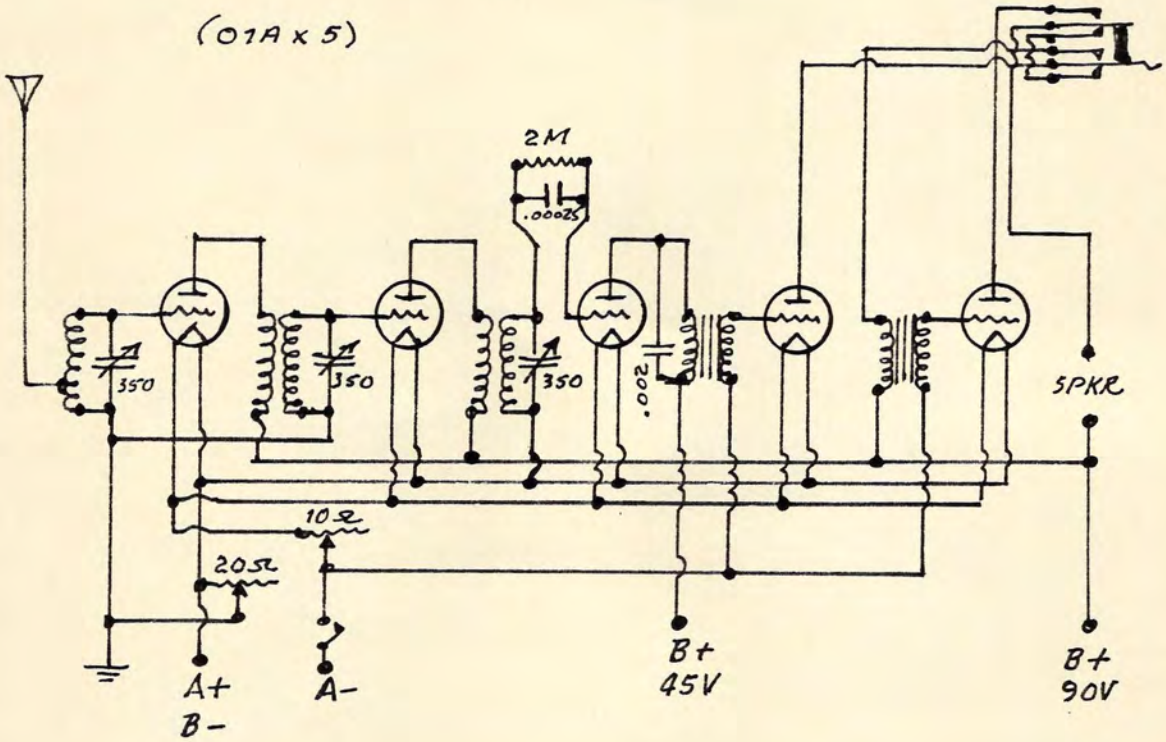

NOTE: The 1925 S-W Model 310 was identical.

(ORSM)

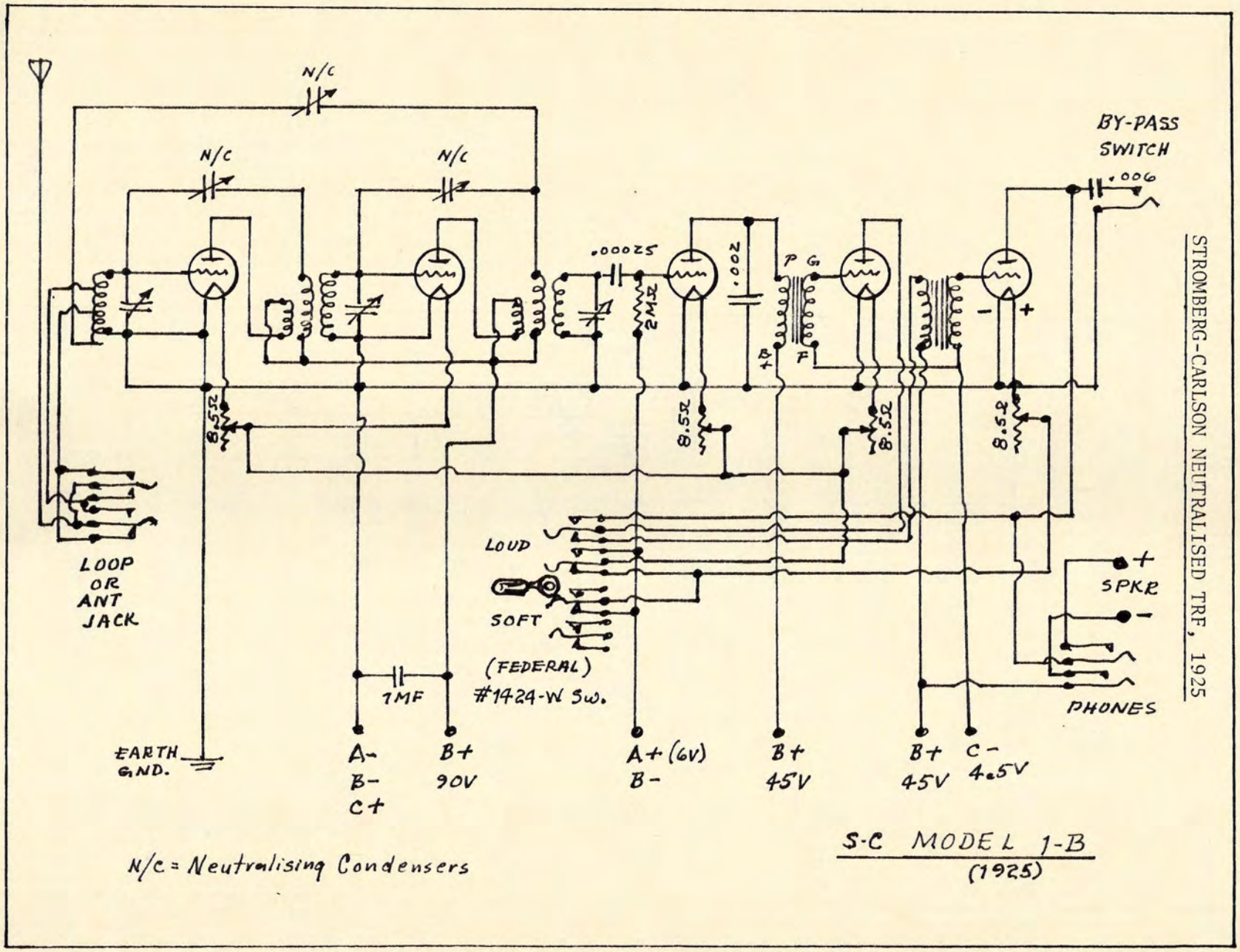

STROMBERG-CARLSON NEUTRALISED TRF, 1925

STROMBERG-CARLSON Model 1-B

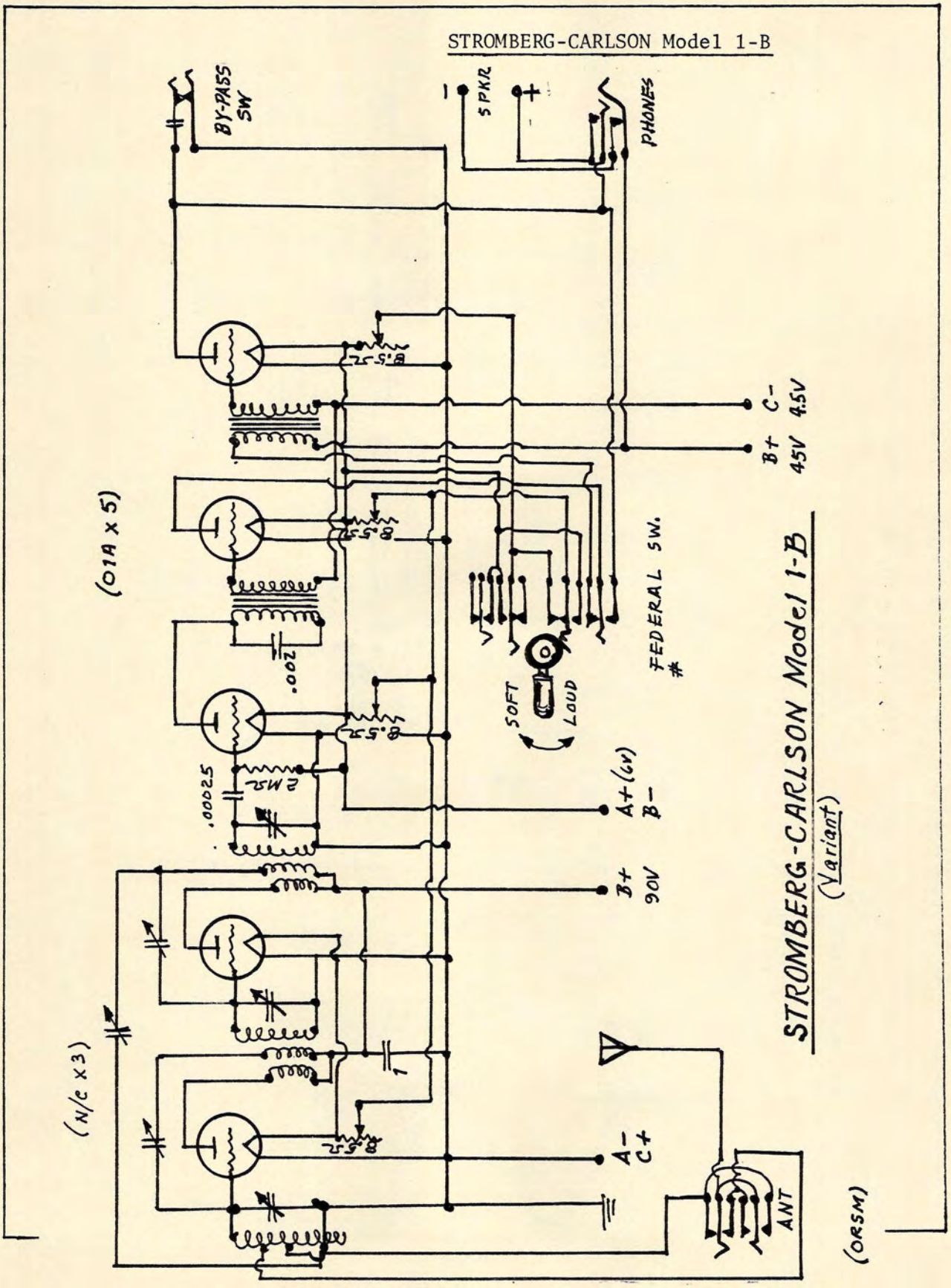

STROMBERG-CARLSON Models 601-B & 602-B, 1926; Sht. 1

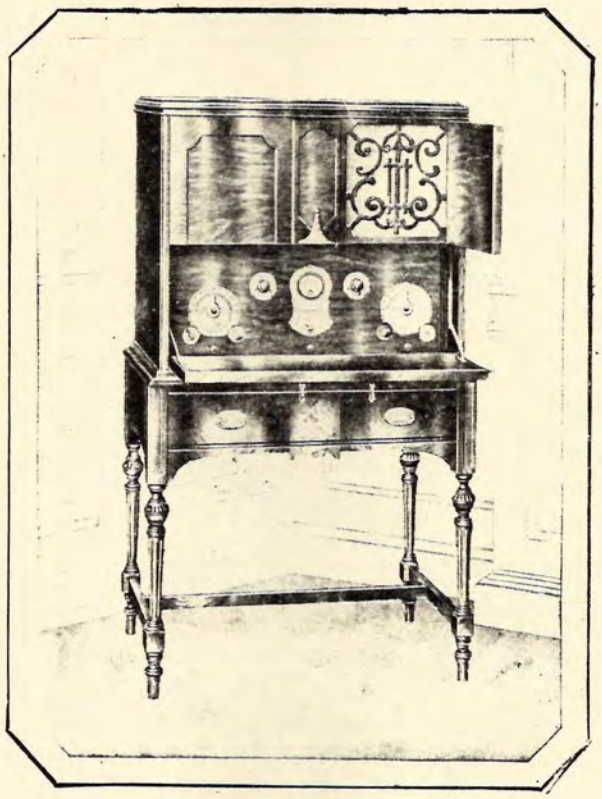

Stromberg-Carlson's Model 601-B, called the "Treasure Chest", is one of the half dozen favourite radios of mine, despite its 81 pounds in weight. It was the baroque panel that first caught my fancy, but after I got into the chassis, I was impressed by the quality of the workmanship overall, and the components in particular. The 602-B was the console version, both chassis being identical. The console model offered space for batteries, relays, and trickle-charger, but oddly enough, despite the ample space, no speaker was incorporated. S-C did, however, recommend that you used their A-5 cone pedestal speaker.

Because of the solid construction, you will rarely have problems with this receiver. The one problem that did seem to occur was with the audio transformers. Because of this, and because of the odd manner in which these transformers were mounted, I am including a sketch of them. The 601s used six tubes, dual controls, a Weston voltmeter, and each stage was enclosed in a total copper shield can. The original price of the 601-B was $225 - slightly higher west of the Rockies...

STROMBERG-CARLSON Models 601-B & 602-B, 1926; Sht. 2

As a Neutrodyne, it was balanced in the conventional manner, and the balancing condensers were readily accessible. All witing was cabled with grounding shielding, which, incidentally, was critical. A dynamic speaker was not recommended, and the cone spekaer manufactured by S-C was under license from the Lektophone Corportaion, who also extended the license to such other manufacturers as Jensen, Magnavox, Utah, etc.

Balancing was not too critical, with this caution: whenever you changed the ANT switch setting or, on the 602-B, went from loop to ANT, or if you replaced the 12A with a 71A, you may have to re-balance the circuit. There was one highly important point:

WARNING

If you are one of those who insists on everything being original in your set-up, you would naturally employ a storage "A" battery. NEVER CONNECT THE BATTERY TO GROUND. If you also incorporate a battery charger, as shown on another page, and one side of the battery connects to one side of the mains, DISCONNECT THE "A" BATTERY.

Again, staying with batteries for a moment, you may encounter interference due to battery noise. To check this, place the left-hand selector at zero, and the right-hand selector at 100. Disconnect both the ANT and GND. If the noise persists, disconnect one battery at a time from the set. When the noise ceases, replace the battery that caused it. Many of the early battery eliminators were prone to AC hum; there were an infinite number of ways of alleviating it, and many are detailed in Vol. VII.

If you encounter acoustic howl in the speaker, but not when you plug-in headphones, it means the speaker is too close to the receiver.

The 602-B had a unique arrangement for installing both an antenna and a loop; the 601-B did not have it. If your set has four binding posts on the ANT-GND strip, you have the 602-B arrangement. You will then have in the first RF stage a flat black vertical strip, showing just above the shield can. The strip when pulled up shows the letters "L" and "A", for loop or antenna. This strip, called a switch by S-C, allows you to switch from one to the other by simply pulling it up or pushing it down. However, if you switch from "A" to "L", you may have to re-orient your loop. The loop manufactured by S-C has mounting provisions on the back of the cabinet but any loop will work.

When a conventional GND connexion is not feasible, a counterpoise ground may be used. The simplest would be a 30-ft. piece of insulated wire stretched along the floor, preferably in a straight line. The free end

STROMBERG-CARLSON Models 601-B & 602-B, 1926; Sht. 3

should not be placed near anything metallic. A counterpoise ground of this kind will work quite satisfactorily, although the receiver will tune a bit more broadly than normal. Contrary to the thinking of many, grounding a receiver to the mains conduit is a poor ground, in as much as such conduit has high resistance joints, which prevent obtaining a good ground to earth. You will also pick-up electrical noises. If you live in an area that is prone to lightning storms, the old fashioned lightning arrestors are advisable.

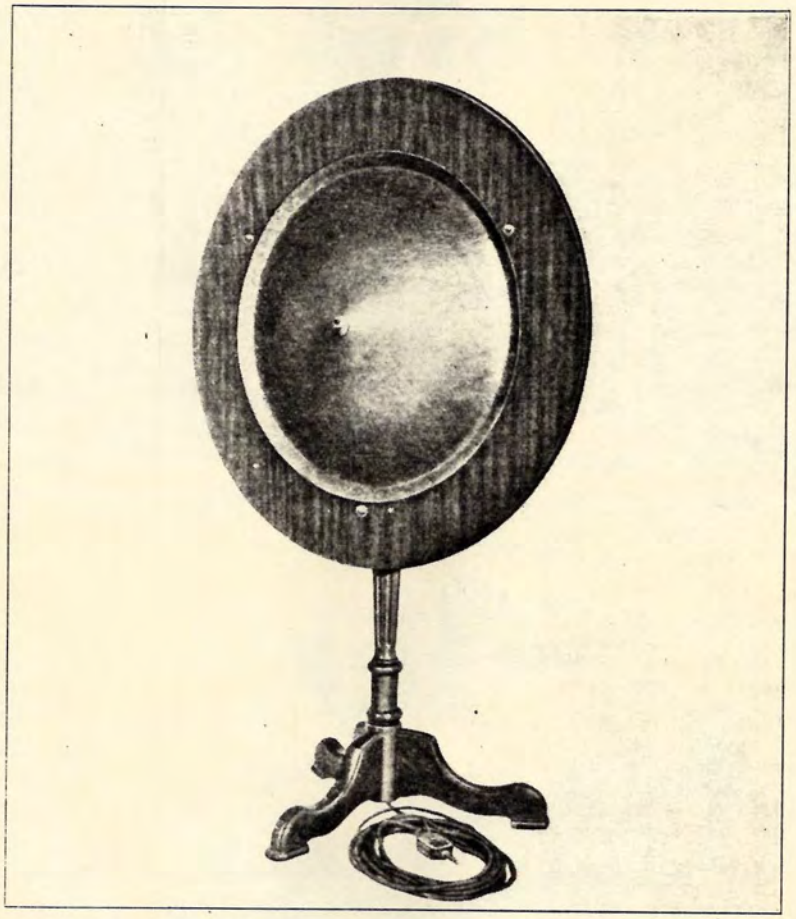

Stromberg-Carlson No. 5-A Tip-Top Table Cone Speaker

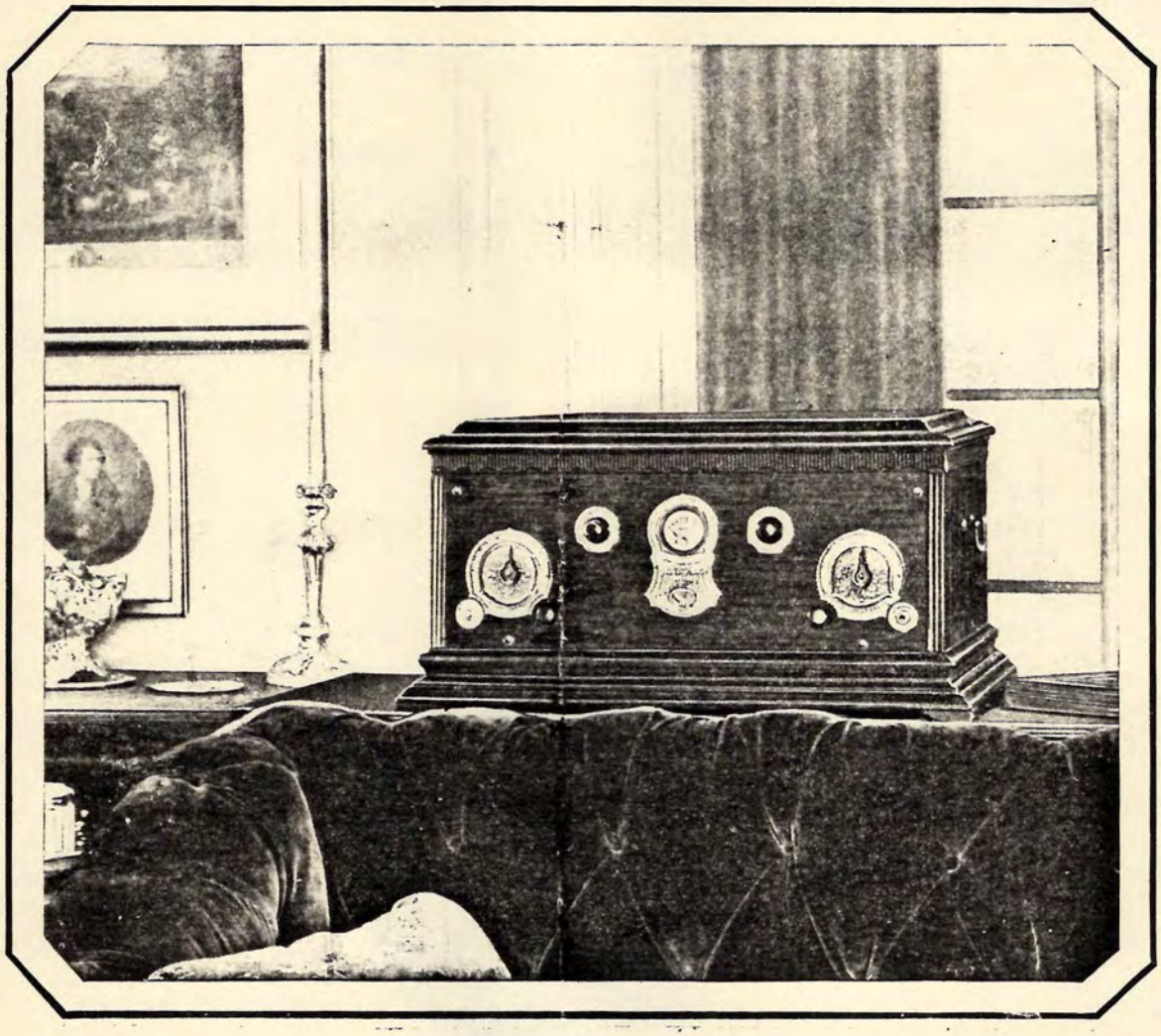

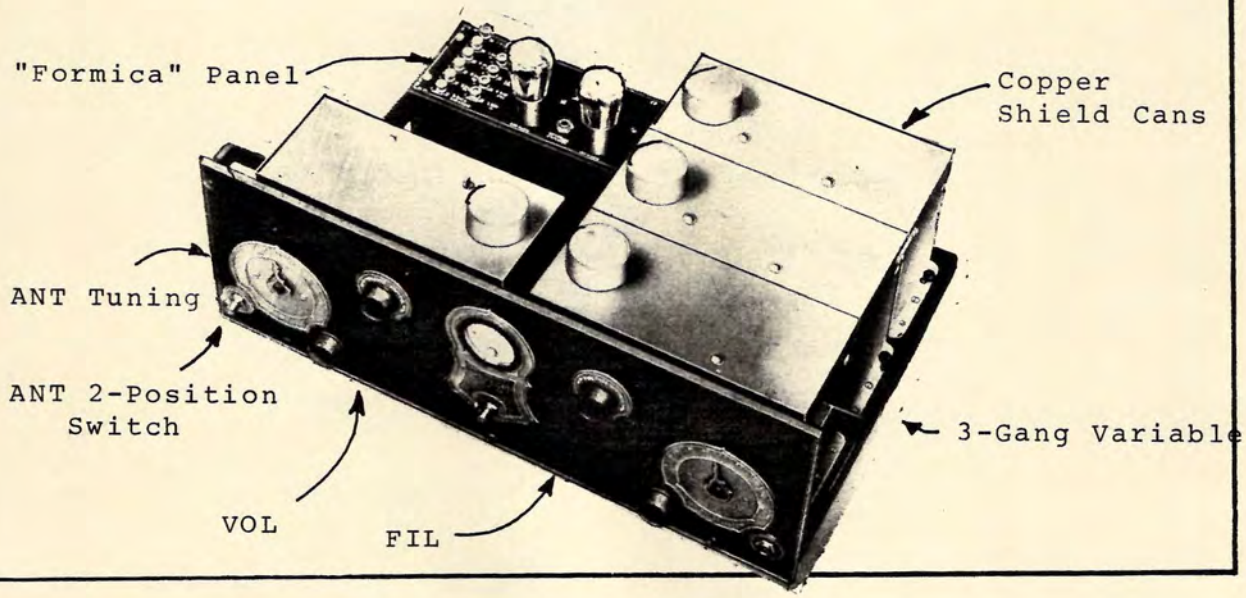
"Formica" Panel
Copper Shield Cans
ANT Tuning
ANT 2-Position Switch
3-Gang Variable
VOL
FIL

STROMBERG-CARLSON Model 601/602 NEUTRALISED TRF, 1925

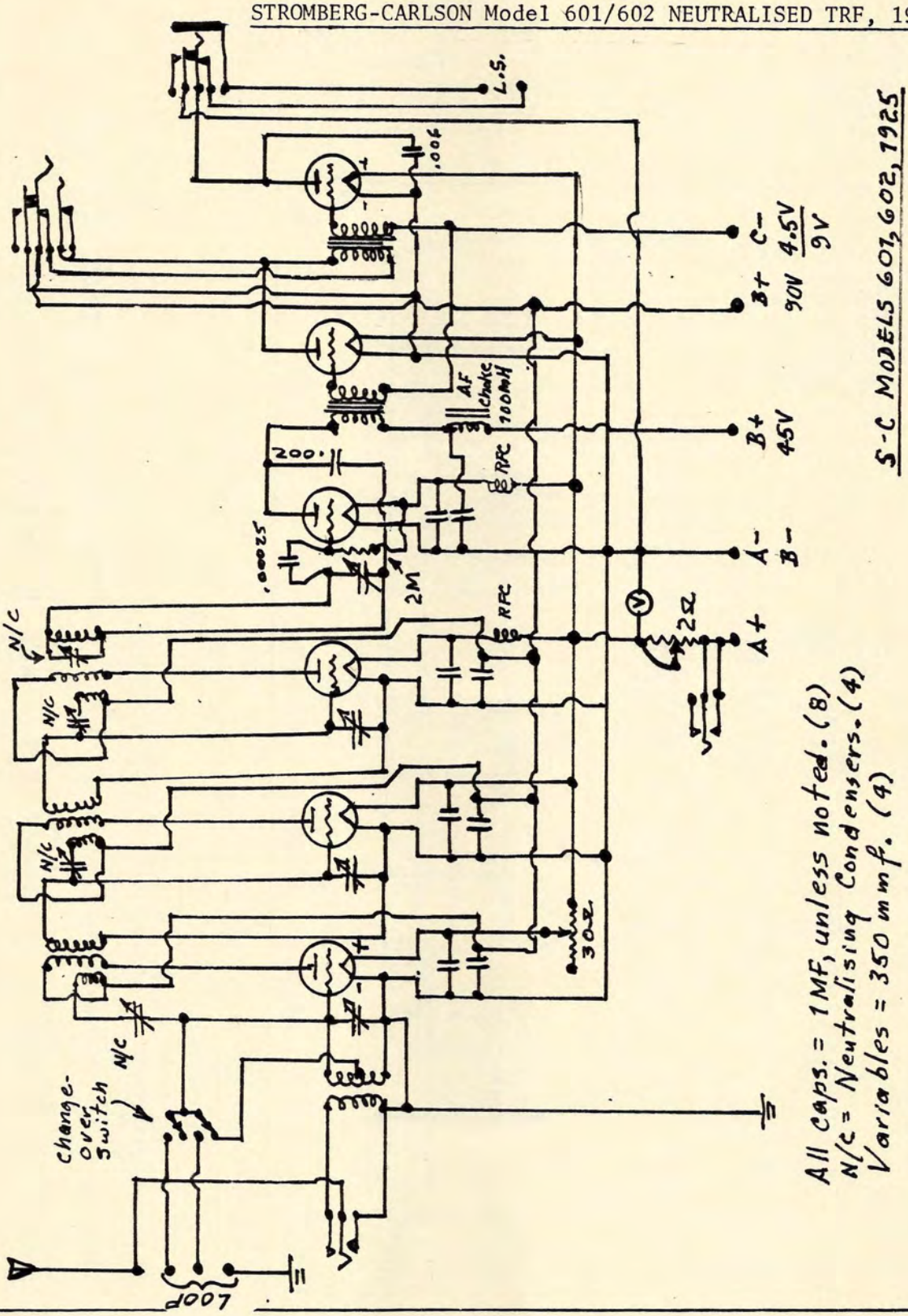

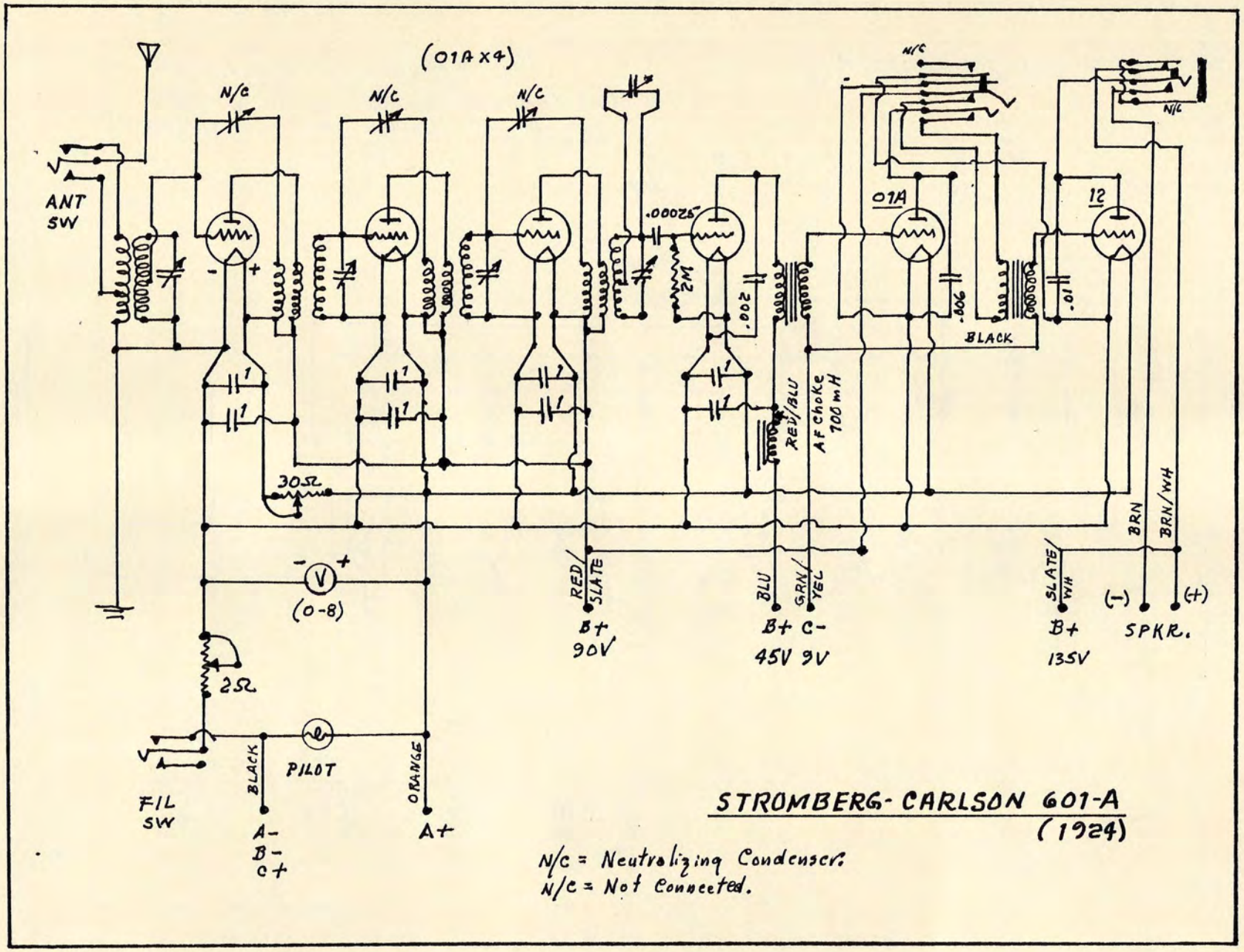
(01A x4)
N/C
ANT SW
.00025
2M
.002
01A
.006
BLACK
12
.01
AF choke 100 mH
RED/BLU
30Ω
(0-8)
2Ω
FIL SW
BLACK
PILOT
ORANGE
A-
B-
C+
A+
RED/SLATE
B+ 90V
BLU
GRN/YEL
B+ C-
45V 9V
SLATE/WH
B+ 135V
BRN
BRN/WH
(-)
(+)
SPKR.
STROMBERG-CARLSON 601-A
(1924)
N/C = Neutralizing Condenser.
N/C = Not Connected.

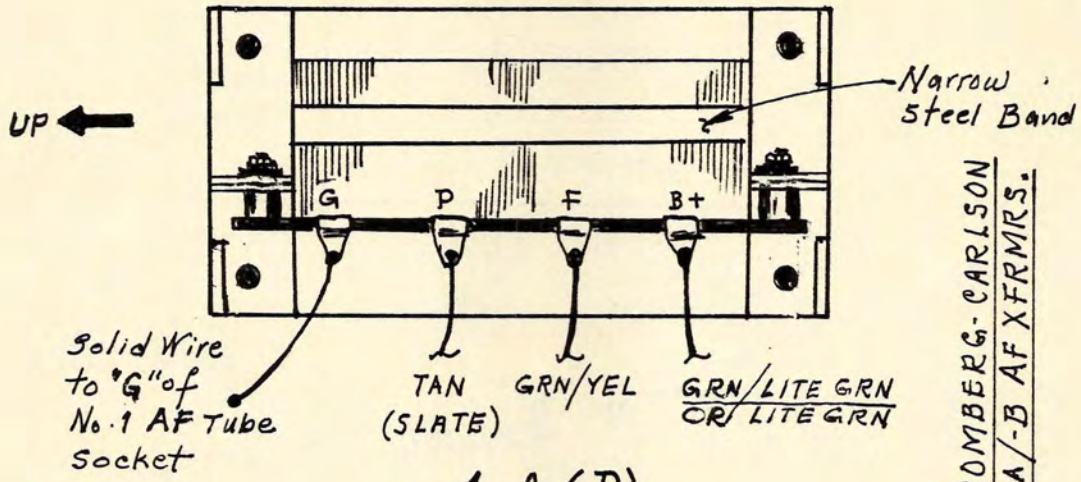

4-A (D)

STROMBERG-CARLSON 601-A/-B AF XFRMRS.

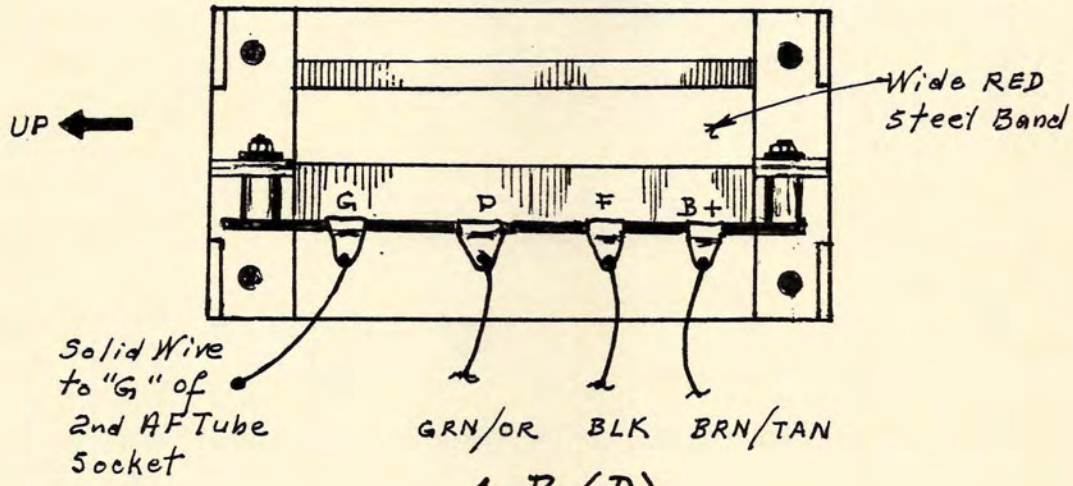

4-B (D)

NOTES:

1. Xfrmrs. are mounted vertically under panel, w/ "G" terminal upper-most.
2. Original S-C colour-code; chassis wiring:

A− = Black	C− = Green/White
A+ = Orange	B+ 45V = Blue
B− = Black	B+ 90V = Red/Slate
C+ = Black	B+ 130V = Slate/White

Speaker = (+) Brown/White; (−) Brown

3. On AF Choke "P" & "B+" terminals not connected.
4. AF Choke Connexions (100 mH):
   Blue - to 45V line. Red/Blue - to DET neutralising condenser, & to "P" wire from 1st AF xfrmr.

STROMBERG-CARLSON 601/602 Neutrodyne, 1926; General Note

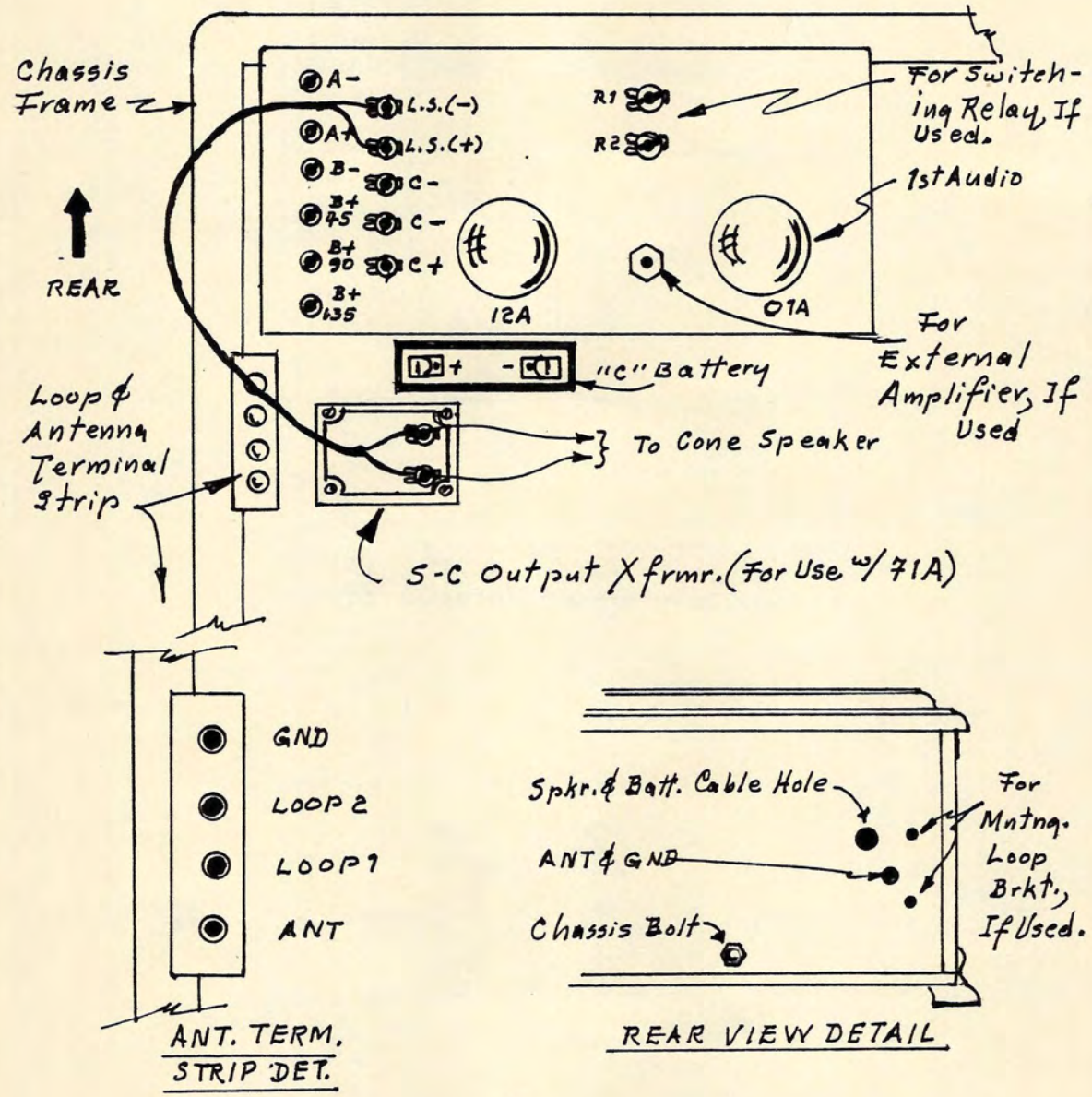

STROMBERG-CARLSON 601 DETAILS

STROMBERG-CARLSON 601/602 Neutrodyne, 1926; General Notes

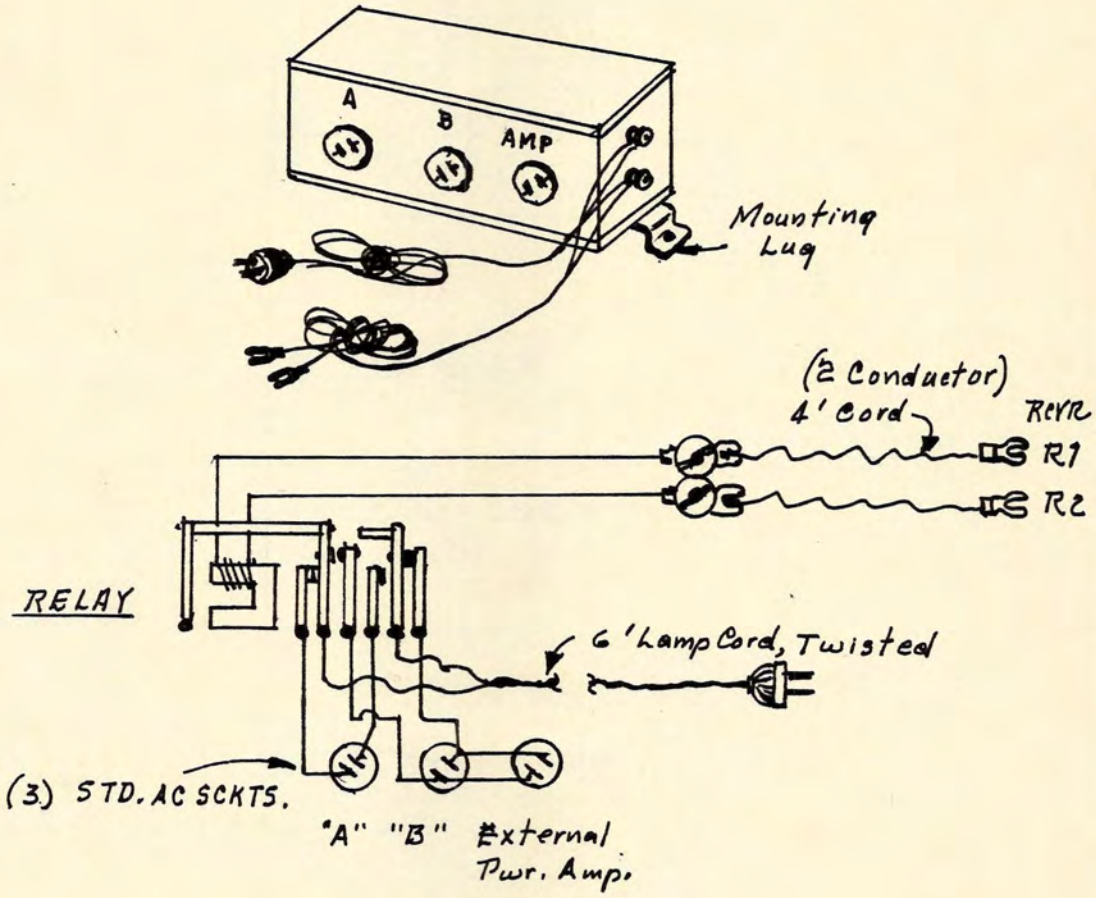

STROMBERG-CARLSON 301-A RELAY

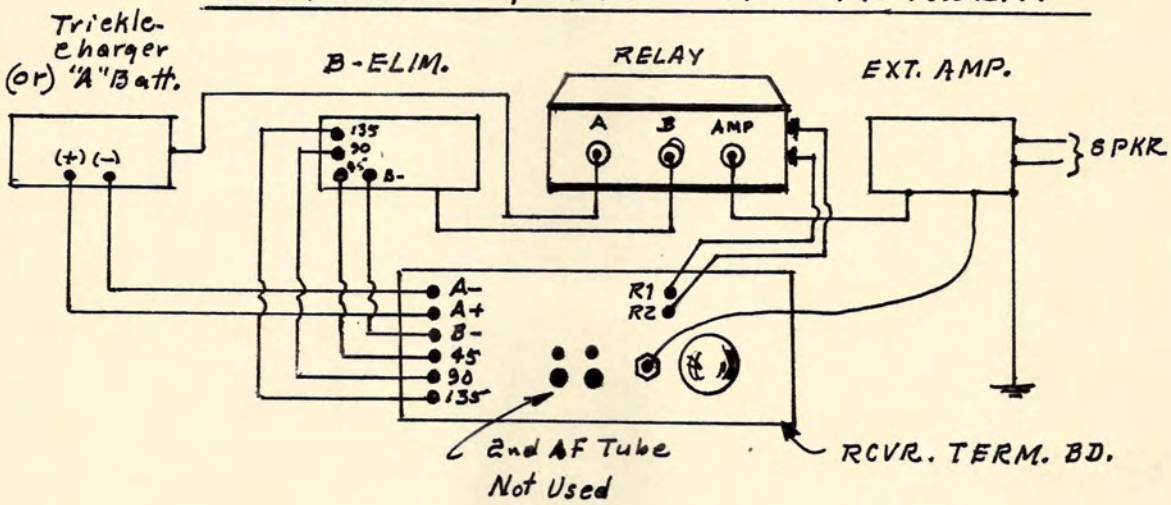

STROMBERG-CARLSON Models 601-A/-B;Sht.

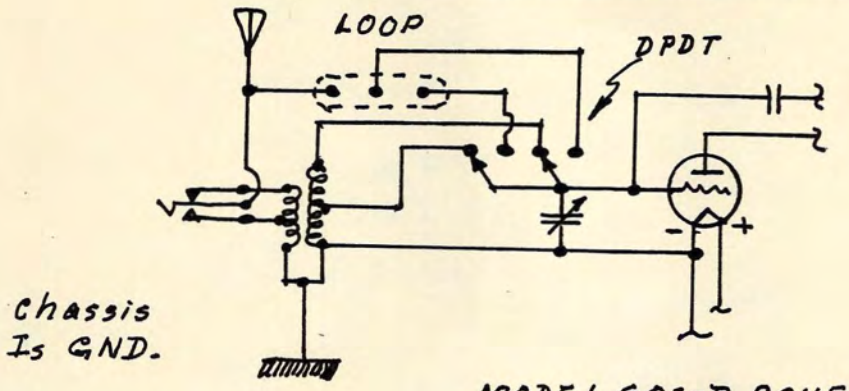

MODEL 601-B CONFIGURATION

ANT COIL DATA: PRI = 22 Turns, Top.
8 Turns, Bottom
SEC = 21¾ Turns, Top.
21½ Turns, Bottom.

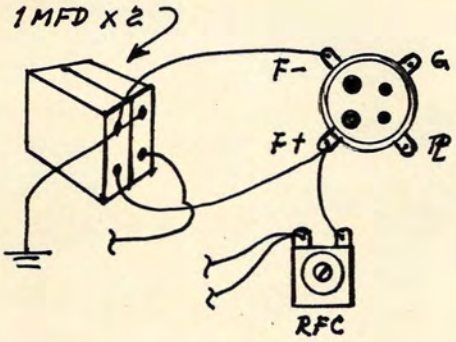

TYPICAL FIL CONNEXION

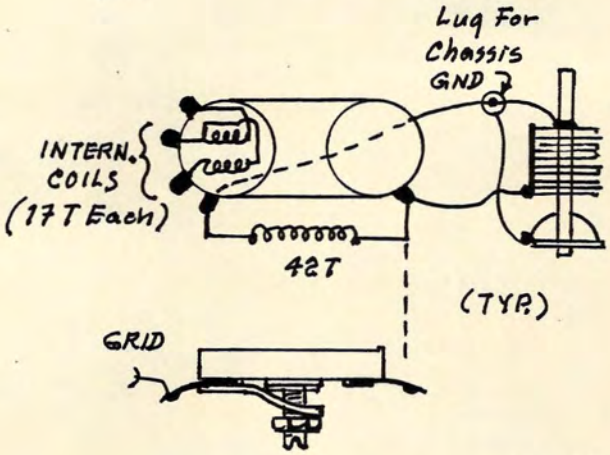

TYPICAL RF COIL CONNEXIONS

TUBE LAYOUT

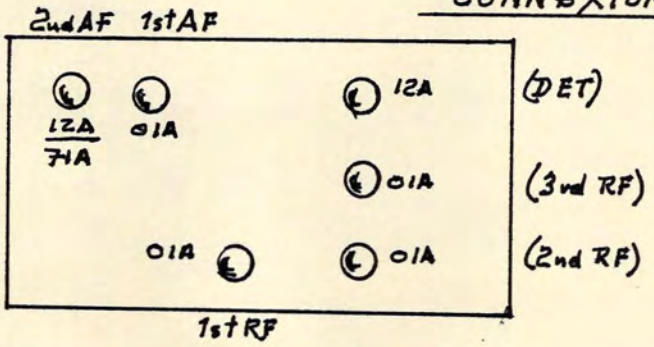

STROMBERG-CARLSON Model 602-B LOOP-ANTENNA SWITCHING

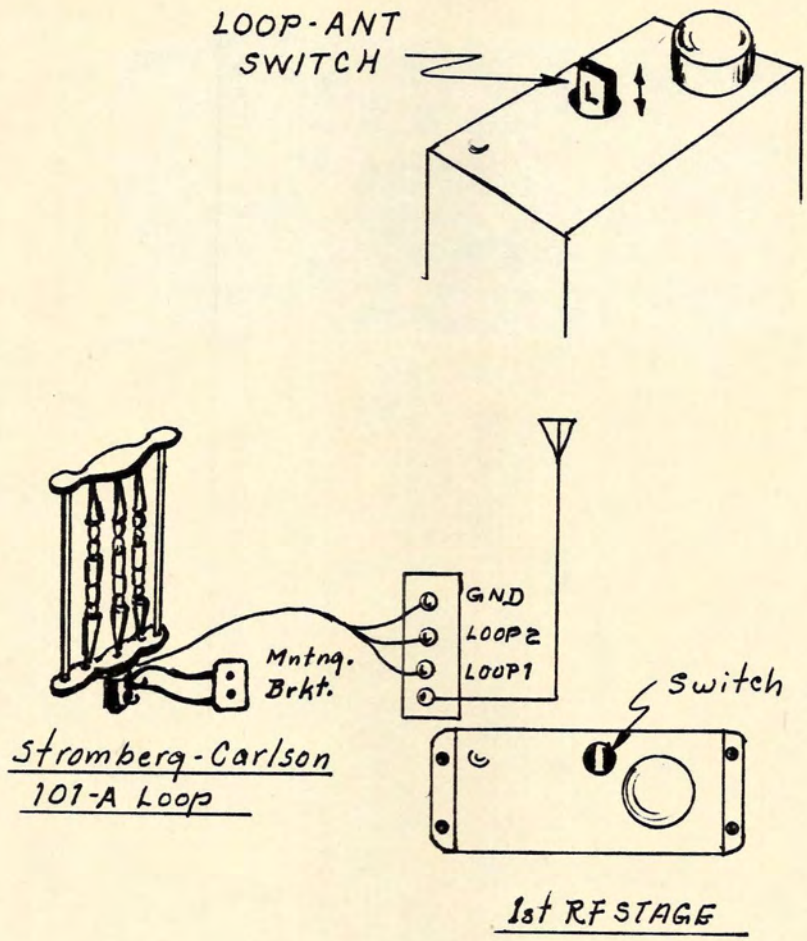

Stromberg-Carlson Receivers Nos. 635 and 636

MODEL 635

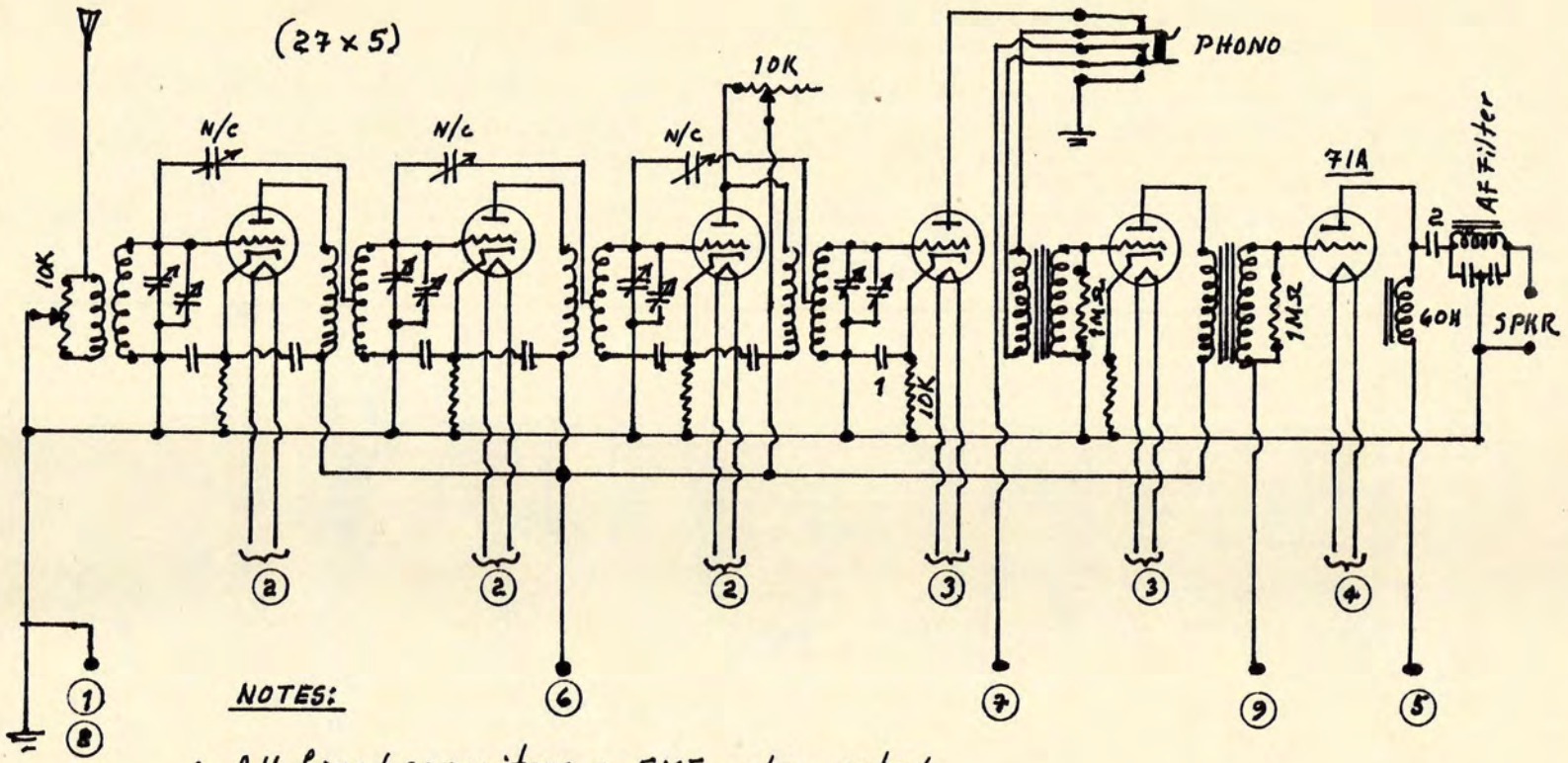

NOTES:

1. All fixed capacitors = .5MF, unless noted.
2. All cathode (K) resistors = 1.5KΩ, unless noted.
3. See Sheet 2 for continuation of numbered lines.
4. Also applicable to Model 636.

STROMBERG-CARLSON Model 635
NEUTRODYNE ~ 1929

(Sht. 1)

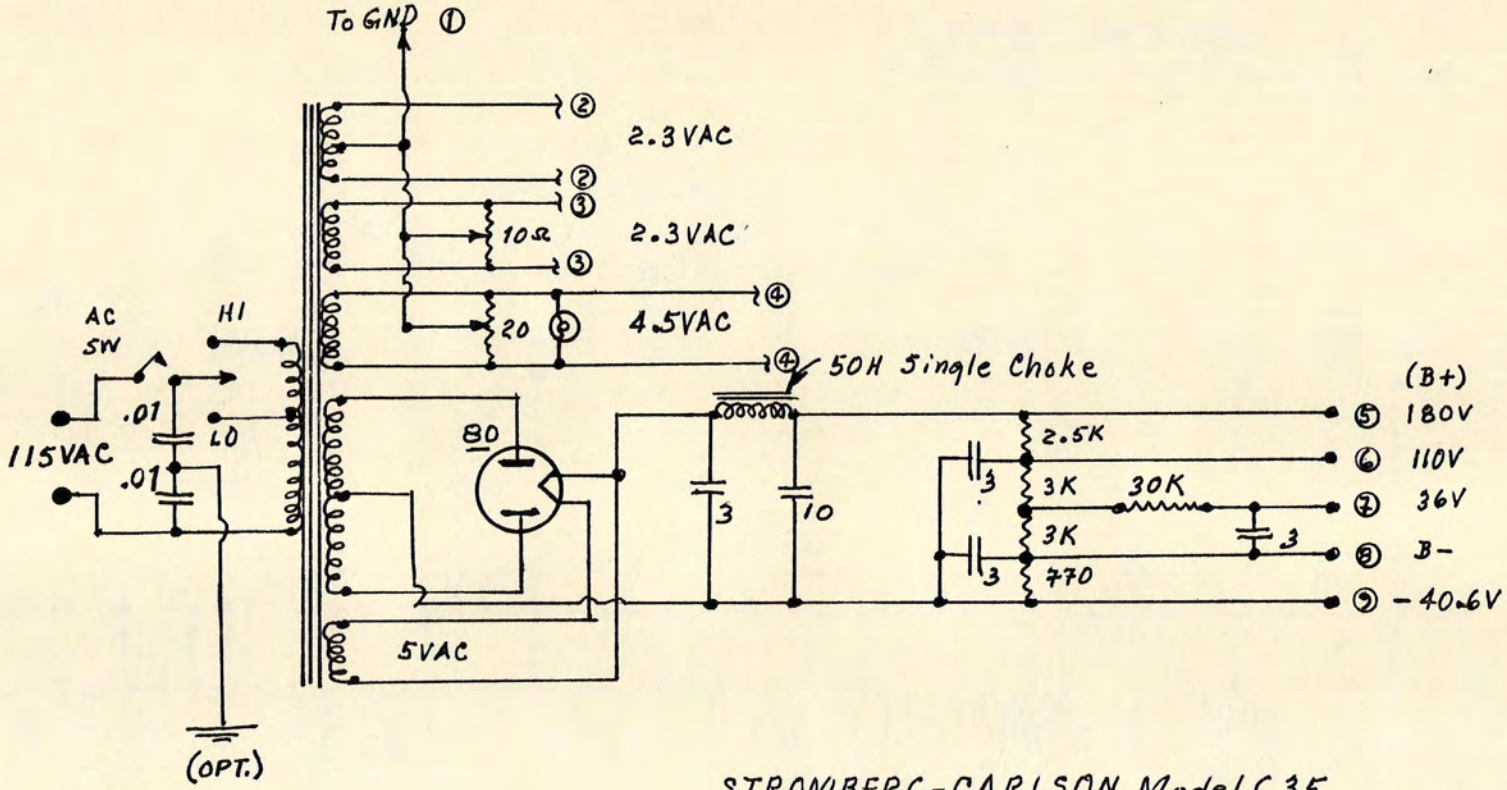

STROMBERG-CARLSON Model 635
POWER SUPPLY (Also Model 636; 1929)

(sht. 2)

NOTES:

1. HI-LO Switch was used to compensate for line voltages.
2. Heaters of the 3 RF & 1st AF tubes wired parallel but each w/ twisted pairs.
3. Hum-busting pots had variable contacts grounded.

THOMPSON "MINUET R-81", 1926

CABINET SHOWING LOUIS XIV MOULDINGS

The move towards the "furniturisation" of radios began slowly around 1924, as manufacturers were beginning to realise that what went into the average American home was decided by women.

During the next five years we were treated to a veritable niagara of cabinet and console designs, ranging from the simply products of Southern Toy to the elabourate consoles by Excello, and were priced accordingly. In terms of table-model cabinets, Corbett and Fritt were dominant, and their cabinets still command attention today. There were also piano companies and carriage-wheel manufacturers who also had a go at producing radio cabinets, but they did not endure. There were also foreign influences and fads at most every level of society during the Twenties, and the design of radio cabinets reflected such, ranging from early Italian to Oriental to what became known as Decoart. (Mah Jong was also popular, competing with the Bridge craze, but as Mah Jong was known as "the game of a thousand intelligences", it really didn't filter down to the masses.)

In this age of instant-everything, plastic living, plastic gadgets, plastic money, plastic morals, it is difficult for the current generation to realise, let alone appreciate, just what a fine art the working of wood really was - the skills, the talents, the actual love of wood that many a cabinet-maker brought to his craft. The fact that we still find some of the old radio cabinets in an excellent state of

THOMPSON "MINUET R-81", 1926

preservation is a testament to the love and talent expended on them.

The Great Depression naturally affected cabinet-makers, and wood-working slowly became a dying art. In the Thirties we were overwhelmed with radio cabinets made of cheap woods, laminations, injected plastic mouldings such as the grossly over-rated "Catalins", and even wood-grained paper pasted over plywood. Scott attempted to buck the trend with his massive consoles, but for all his clever eccentricities, even Scott could not buck the tide. Also, candidly speaking, his massive consoles simply over-powered the eye, and few were visually attractive. But to give the Devil its due, Scott's console cabinets were the finest being produced in the U.S.

One of the more visually arresting cabinets from the Twenties was the cabinet designed for the Thompson "Minuet R-81". There were two versions, with only minor modifications, and both were the essential Thompson 5-tube Neutrodyne which was popular as a conventional table-model radio. But it was the cabinetry that made the R-81 outstanding. One cabinet was offered in plain mahogany, while the other was elegantly decorated in greenish gold motifs after the Louis XIV fashion, and with decorative mouldings placed here-and-there on the front panel. A truly elegant-looking cabinet.

The original adverts for the R-81 read as follows:

"A Unique Apartment House Special Radio !"

Mr. David B. Taylor of Chesterfield, Missouri, has the only R-81 to come to our attention, and some of the accompanying cuts were supplied by him. His is the plain mahogany cabinet, and he says that he is quite pleased with his acquisition and its performance, and he, too, has expressed a desire to see the Louis XIV cabinet.

While the R-81 was a conventional Neutrodyne, it did contain a few pecularities that seperated it from others. For example, Thompson had adopted Lacault's modulation theory that kept B+ off the plate of the first RF tube, the C- voltages were unconventional, and the second variable condenser had only one trimmer. The station selector was an arm that travelled around an arc at the edge of the speaker-cone, again reminding one of Lacault's very elegant "Ultradyne L-3". This can be seen in the accompanying sketches.

Initially offered at $150, the R-81 was a bit out of reach of the average home-constructor as this was the time when if you tipt a waitress a dime, you had a serf for life, and only Ford employees were earning the magnificent sum of $5 a day. In 1928, to clear out stock on hand, the R-81 was offered at $67.50 - still a healthy sum.

The following paragraphs are direct quotations from the original operating manual supplied by Thompson, for your further edification of what you've already read:

"The variable tuning condensers are mounted on a metal sub-panel and are mechanically coupled by means of wires and pulleys, so that they may be operated from a single major tuning control at the front. In this way the three tuned circuits are controlled by a single tuning knob which swings in a calibrated arc around the circumference of the loud-speaker cone.

"There are two knobs on the front panel which control the FIL supply. The right-hand knob controls the DET and AF tubes: the left-hand knob controls VOL. The DET output amounts to a Direct Current that fluctuates according to the frequency or vibrations of the voice or music being received. A short ANT is to be preferred.

"When the two small compensating knobs are set for maximum effectiveness for one station, they will need little attention thereafter, unless the ANT connection is changed to another terminal on the ANT coupling coil. Range is 200 to 600 meters.

"The life of a set of six radio dry-cells should approximate 80 to 100 hours. Ordinary 6V dry-cells, such as are used for bell-ringing, should not be used. The "B" batteries rated at 45V should be replaced when their output is measured at 34V; the 22.5V "C" battery should be replaced when its output drops to 17V. Batteries should be switched around at least once a month (the way you switch the tires on your automobile). A B-eliminator should NOT be used, unless it can be placed at least 10-feet from the set. The average life-expectancy of the "C" battery is 18 months."

A metal base-plate held the circuit at ground potential, which was convenient when a cold water pipe was not near-by. The two miniature "compensators" (the two small knobs in the centre of the panel) were quite essential, especially when you changed the ANT connexion. In the first version, the ANT ended in a spade-lug, which slipt over one of three binding posts; in the second version, a 3-position tap-switch was incorporated. There was also a key-lock in the ON-OFF switch, an idea pursued by several manufacturers, such as Carter, Frost, Jones, but which never really caught-on - perhaps early home-constructors did not have small children...?

The following illustrations should completely define the R-81, but if you have any questions, please feel free to ask us.

THOMPSON "MINUET R-81", 1926: Sht. 4

R-81 OPERATING INSTRUCTIONS

1. Secure all tubes - sockets were not the cushioned type.
2. Place Compensating knobs at zero.
3. Turn battery switch ON.
4. Rotate main tuning knob until a signal is heard.
5. When signal is loudest, leave control at that point.
6. Adjust Compensating knobs for best fidelity.
7. Trim rheostats (the two outer knobs on the front panel) but do not turn them below the point of best audability.
8. Re-adjust Compensating knobs every time you change the ANT connexion, Each connexion will hold for all stations as long as the connexion is not changed.
9. This was a true "one-spot" receiver (and Mr. Taylor assures me that it still is!): a station heard at one spot on the dial would always re-appear at the same spot.

* * *
* *
*

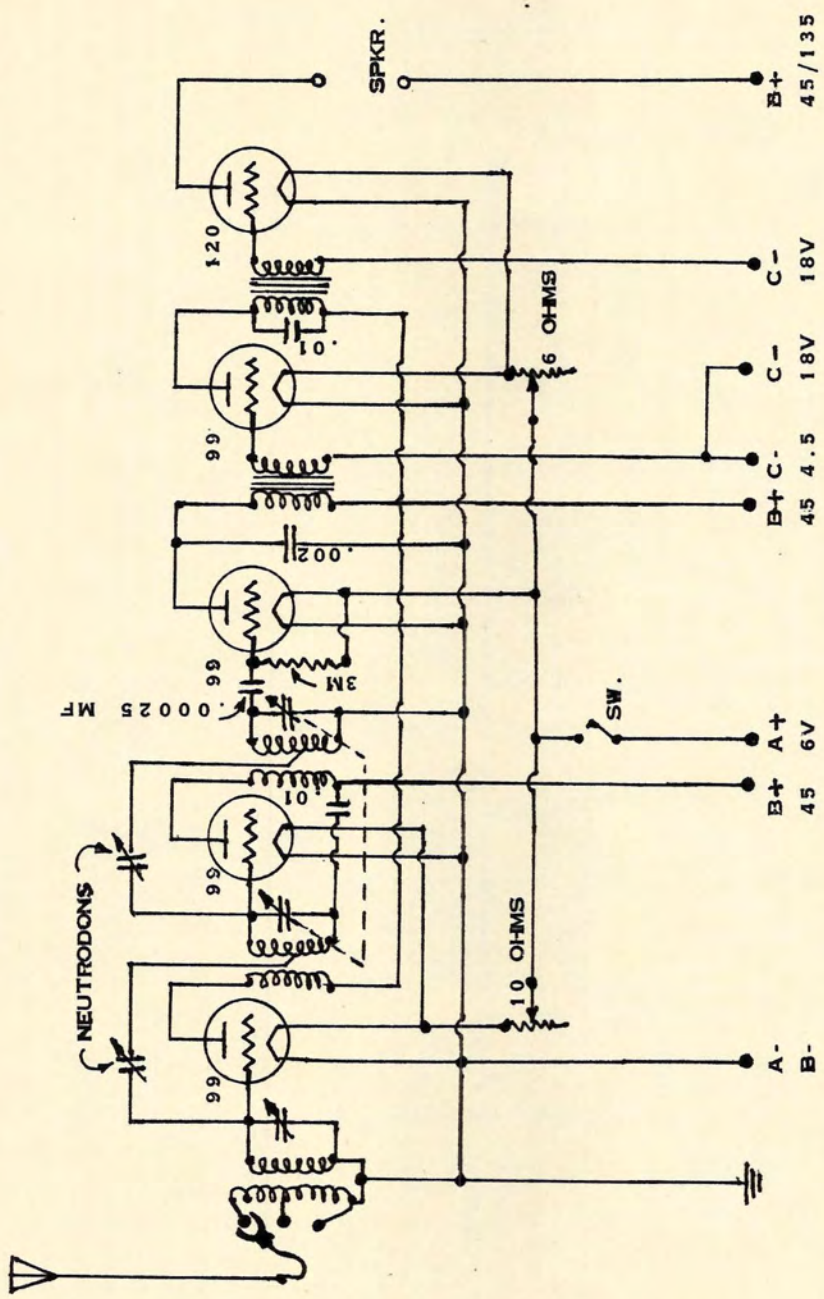

THOMPSON "MINUET" MODEL R-81
First Version
1925

(PR 3-26)

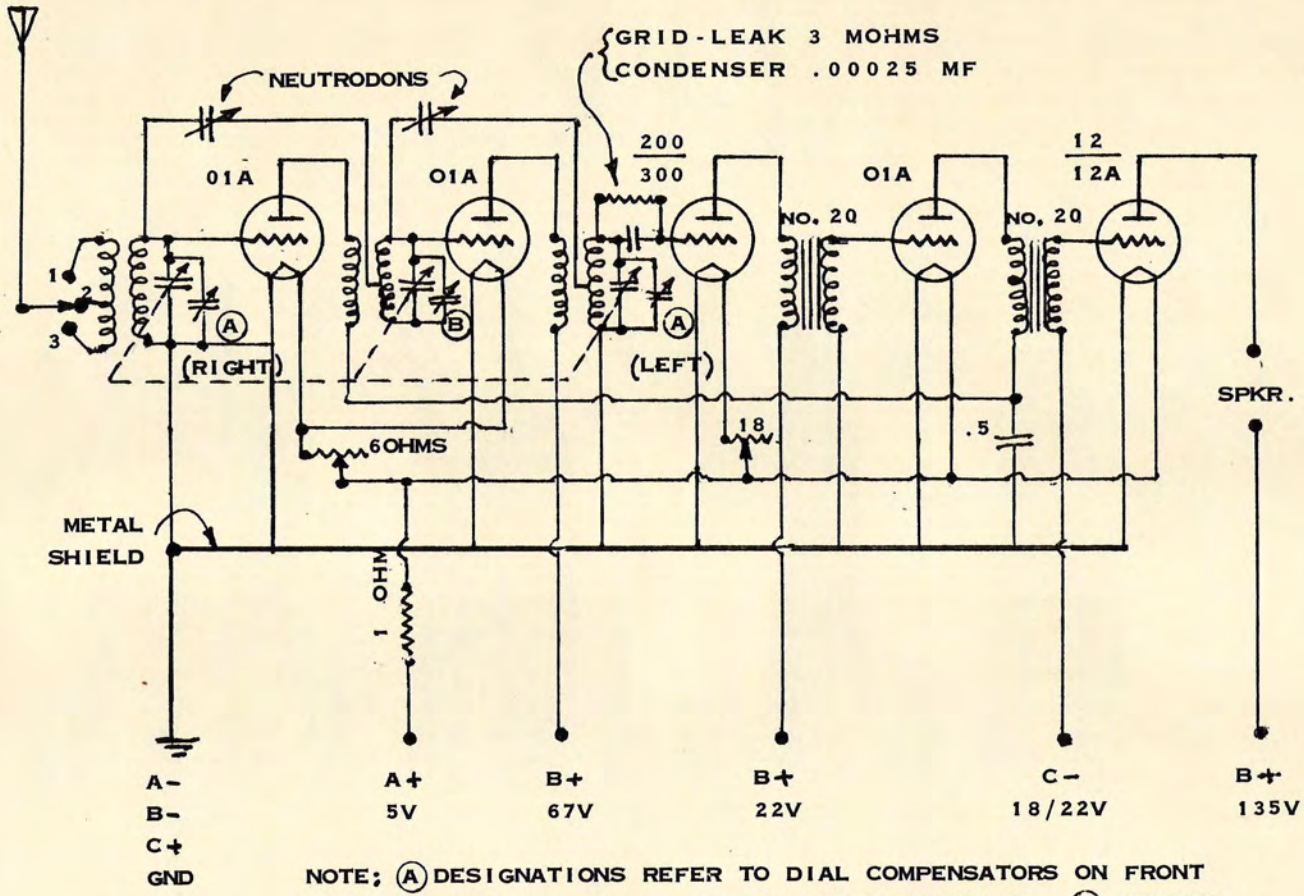

NOTE; (A) DESIGNATIONS REFER TO DIAL COMPENSATORS ON FRONT OF CABINET. R & L DEFINE THEIR LOCATION. (B) REFERS TO THE TRIMMER ON THE VARIABLE CONDENSER.

THOMPSON "MINUET" MODEL R-81
Second Version
1926

THOMPSON "MINUET" Model R-81; 1926

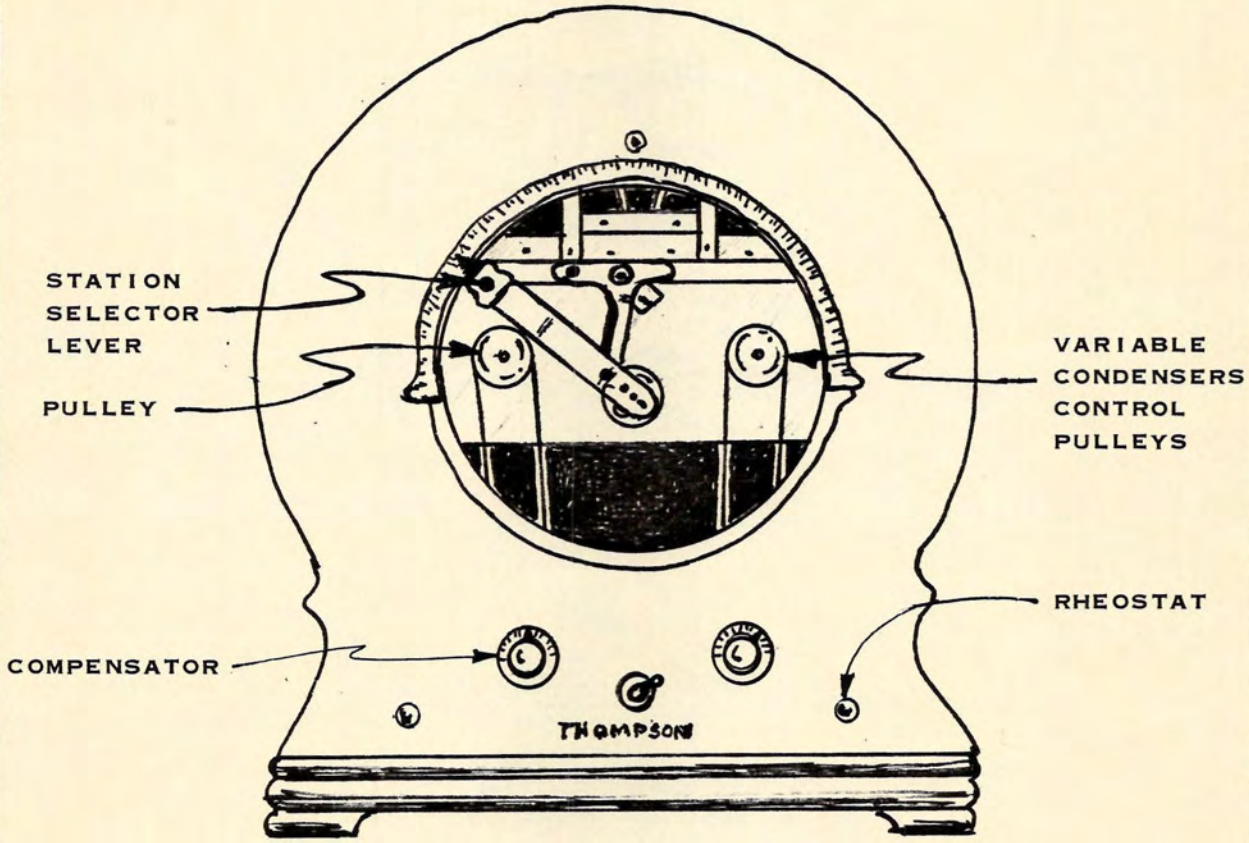

FRONT VIEW WITH SPEAKER CONE REMOVED TO SHOW VARIABLE CONTROL PULLEYS AND THE STATION SELECTOR LINKAGE.

THOMPSON "MINUET" Model R-81: 1926

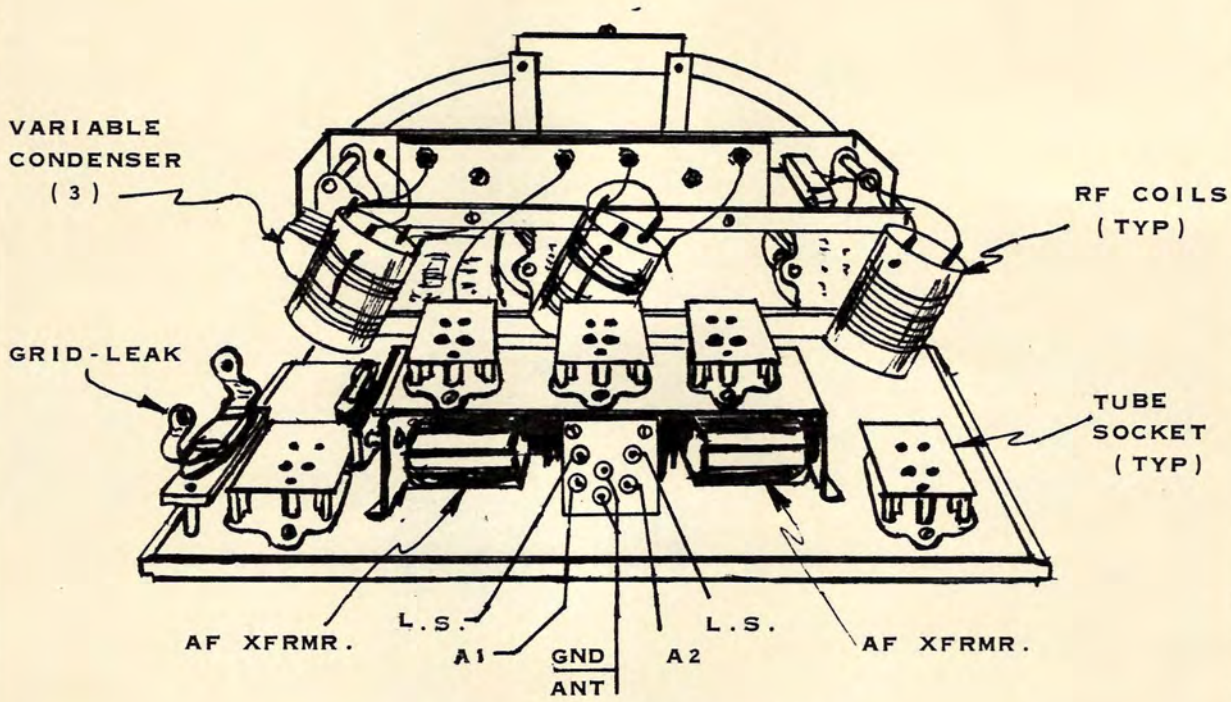

CHASSIS LOOKING FORWARD

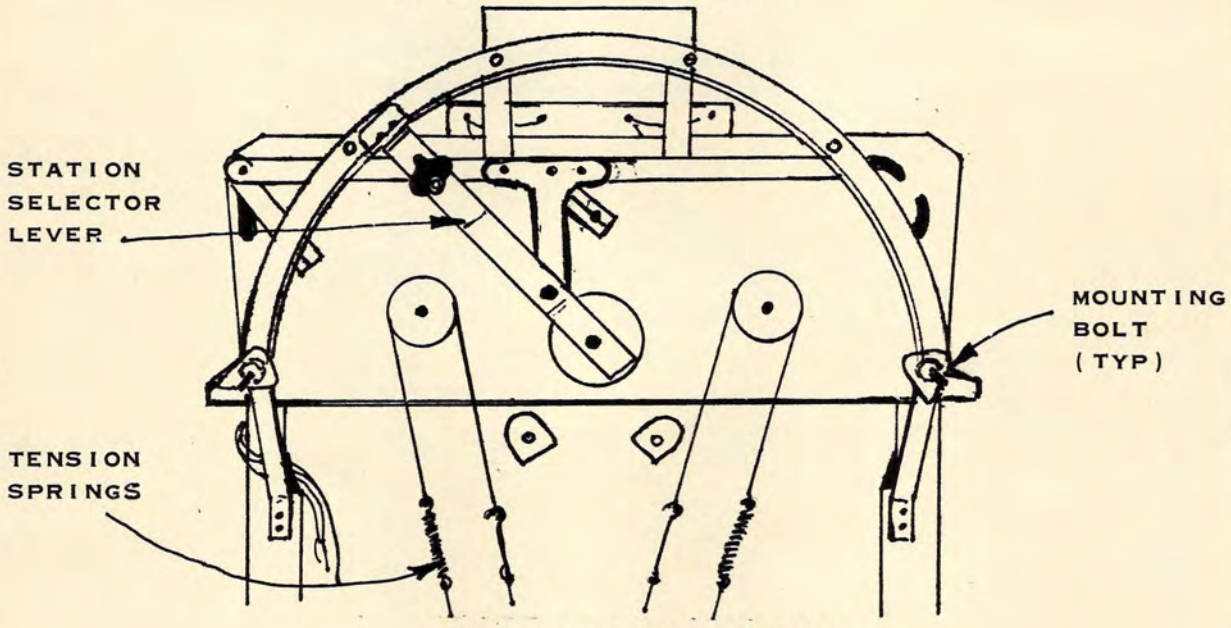

CONTROLS BEHIND SPEAKER

THOMPSON "MINUET R-81" NEUTRODYNE,

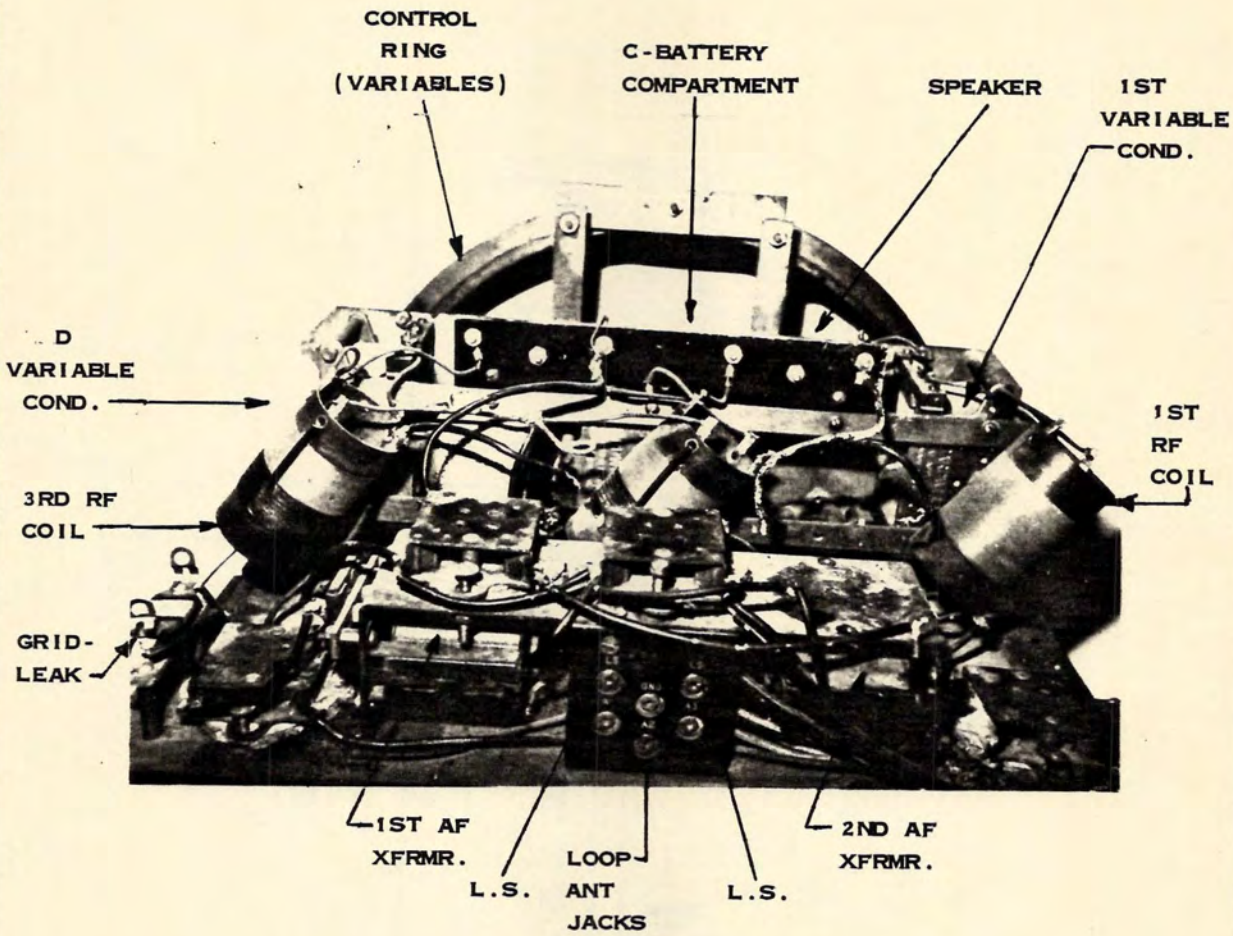

Four tube sockets shown; one tube socket has been removed.

THOMPSON "Minuet R-81", 1926

Battery Connexions

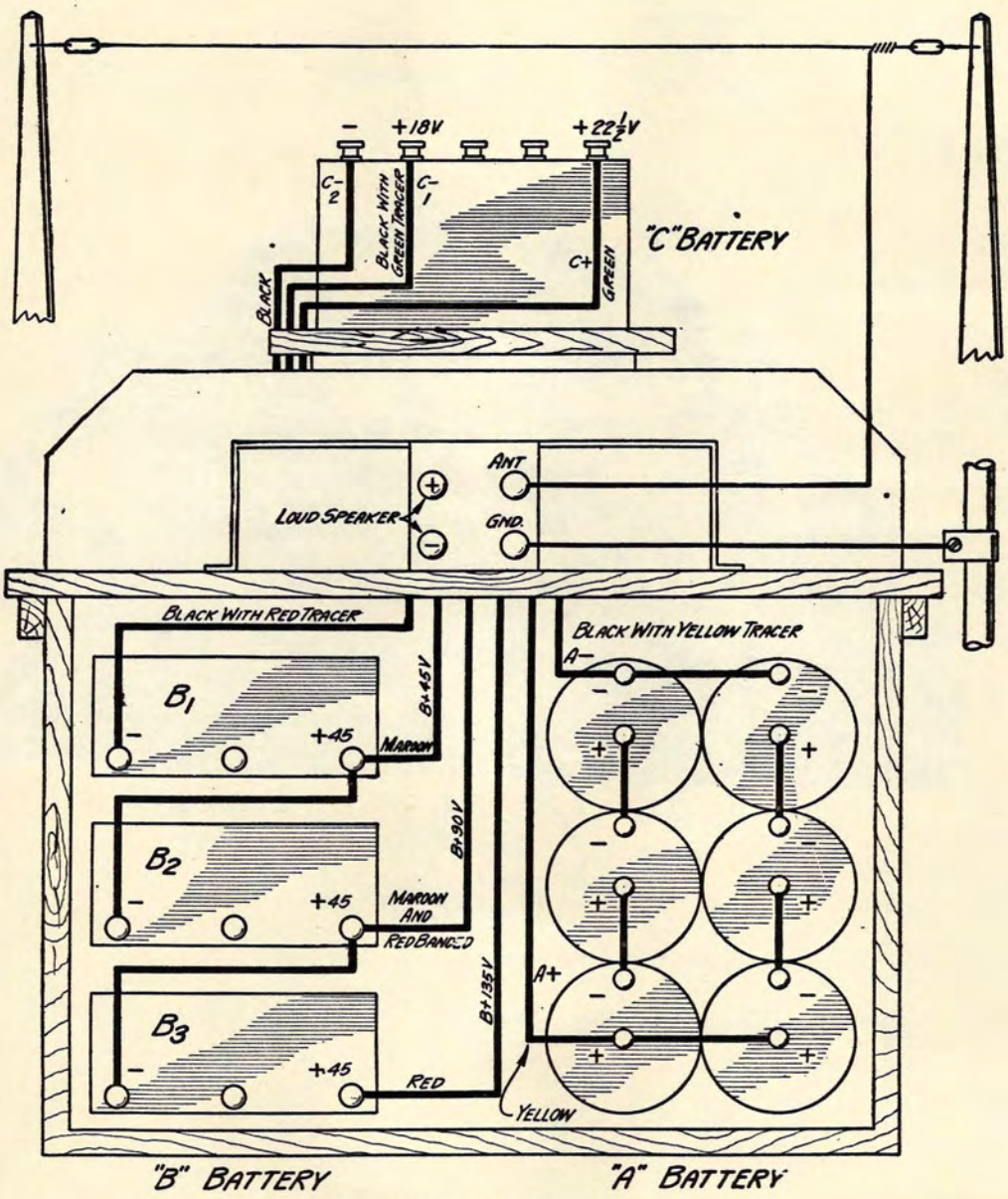

THE CONNECTION CHART

THOMPSON "MINUET" Model R-81, 1926

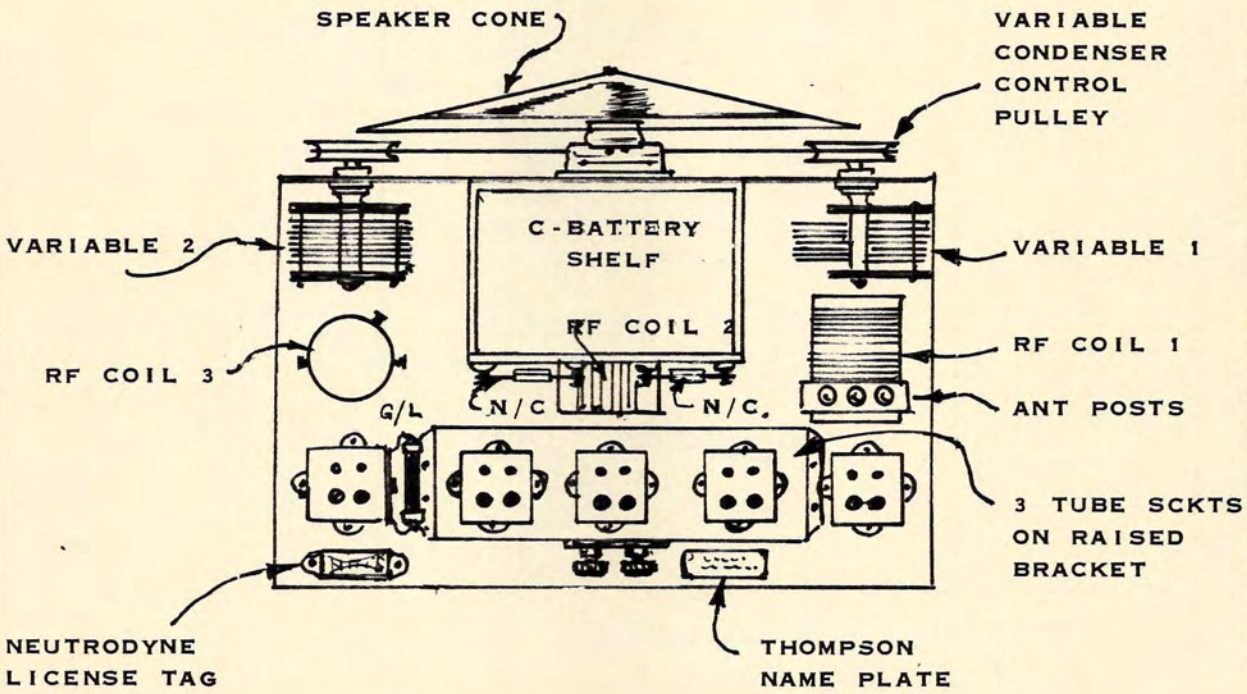

NOTE: VARIABLE CONDENSER NO. 2 IS UNDER SHELF.

PLAN VIEW - CABINET REMOVED

Thompson Neutrodyne

CUT TO **$67.50**

5-Tube Quality Set with Built-in Cone Speaker. Sold at less than cost.

List price, $150. Reorganization forces sacrifice. Direct from manufacturer to you. Fully guaranteed. Licensed under Hazeltine and Armstrong patents. Beautiful tone and distance. Handsome and unique design. Set and cone speaker in one unit. Endorsed by leading engineers. Circular free or send check for $67.50 and will ship immediately.

THOMPSON RADIO CO.
66R York Street Jersey City, N. J.

"THERIODYNE TF-5" TRF, 1926

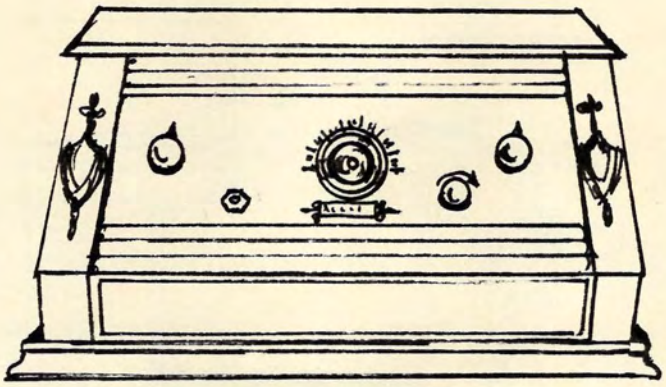

THERMIODYNE TF-5, 1926

(3) .0005 MFD Variables.

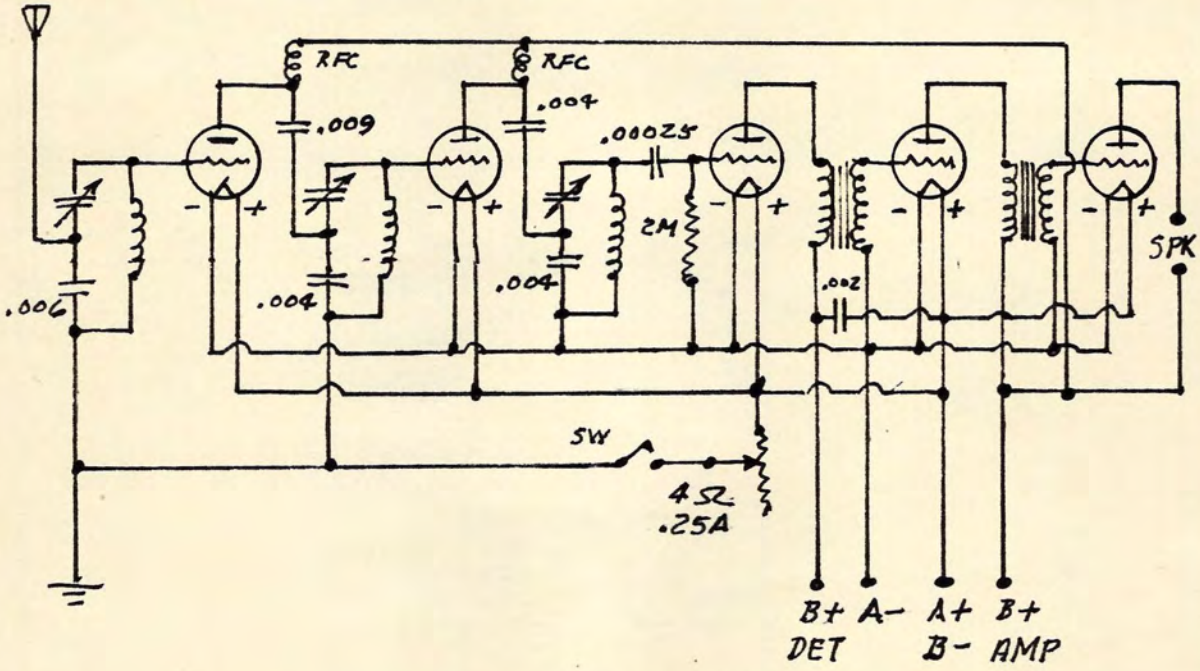

"THOROLA" (REICHMANN) TOROIDAL COIL SET, 1927

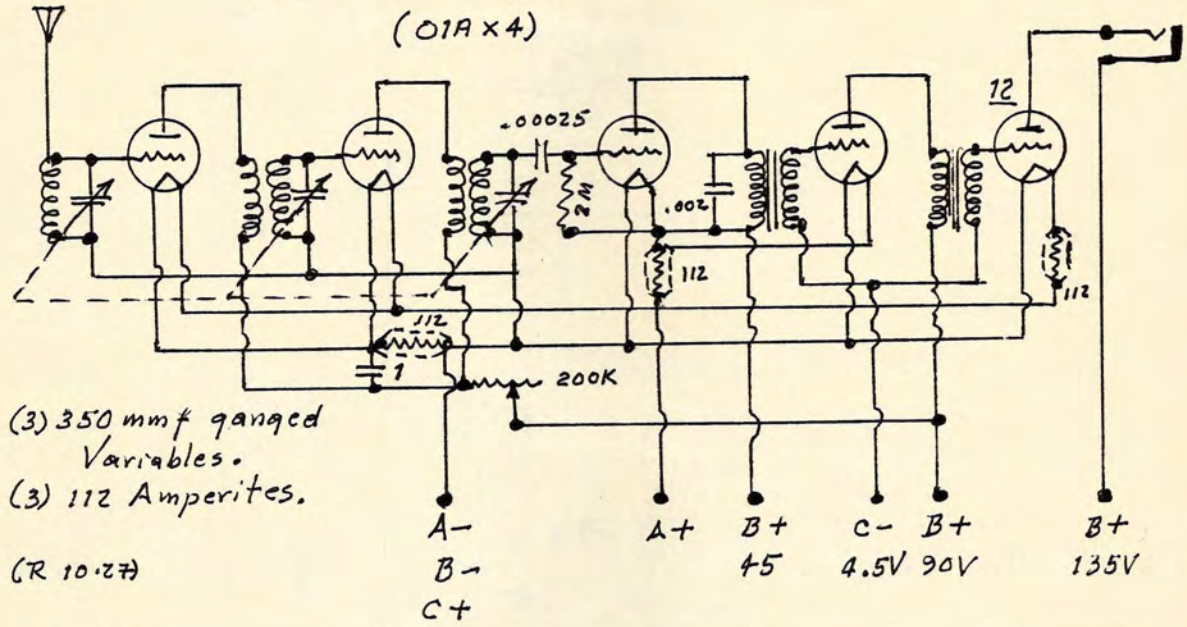

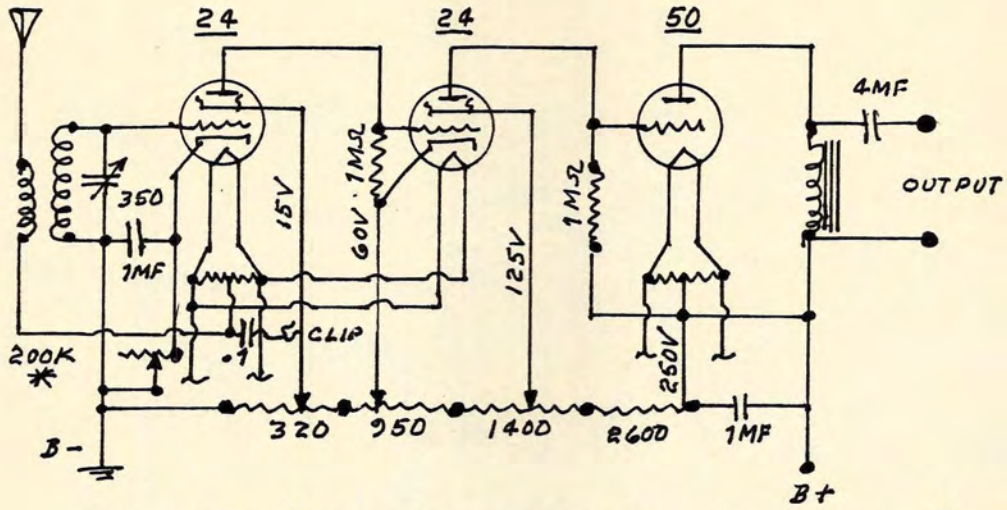

* = 200K pot. should be varied to get a reading of 20 mmA.

LOFTIN-WHITE 3-TUBE CIRCUIT, 1929

THORDARSON QSA-5 RECEIVER; 1928
(Sht. 1)

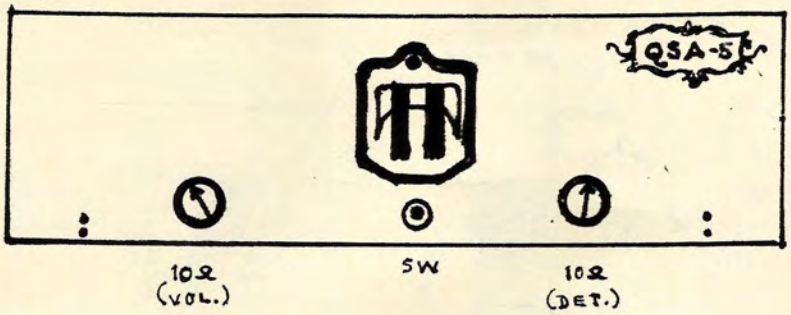

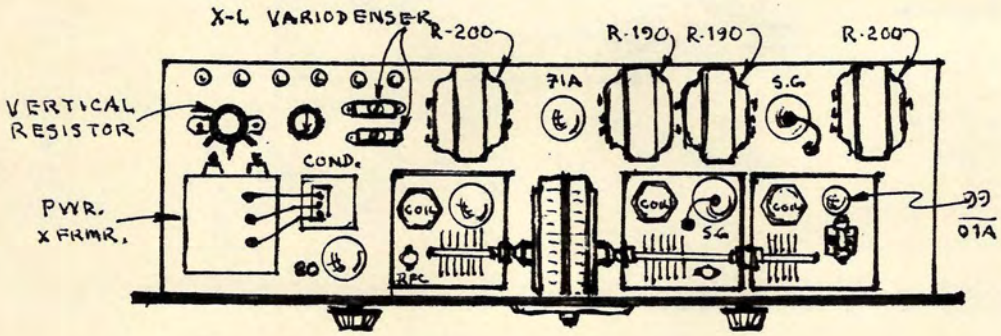

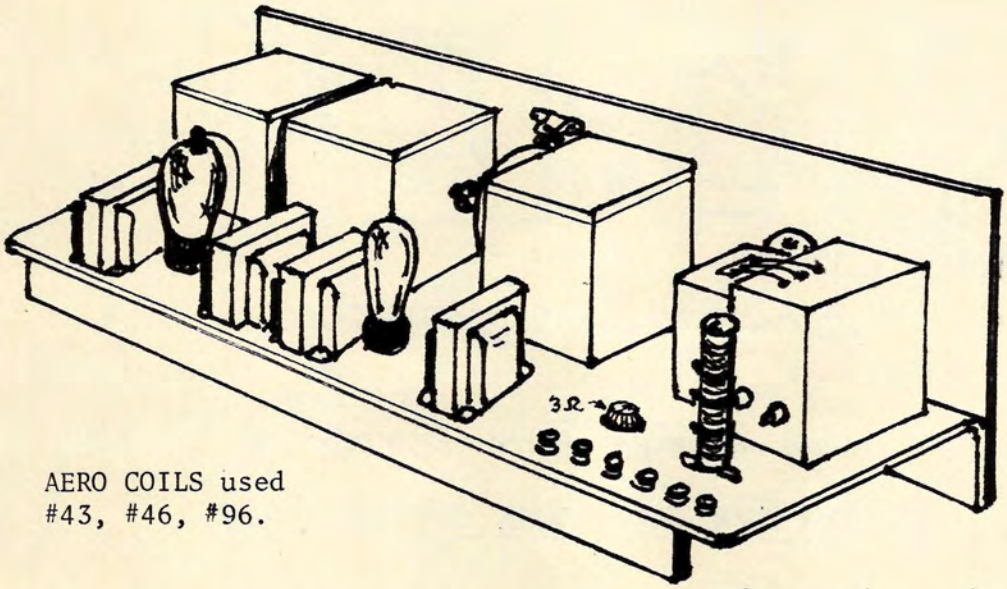

AERO COILS used
#43, #46, #96.

THORDARSON Q-S-A 5 RCVR., 1928

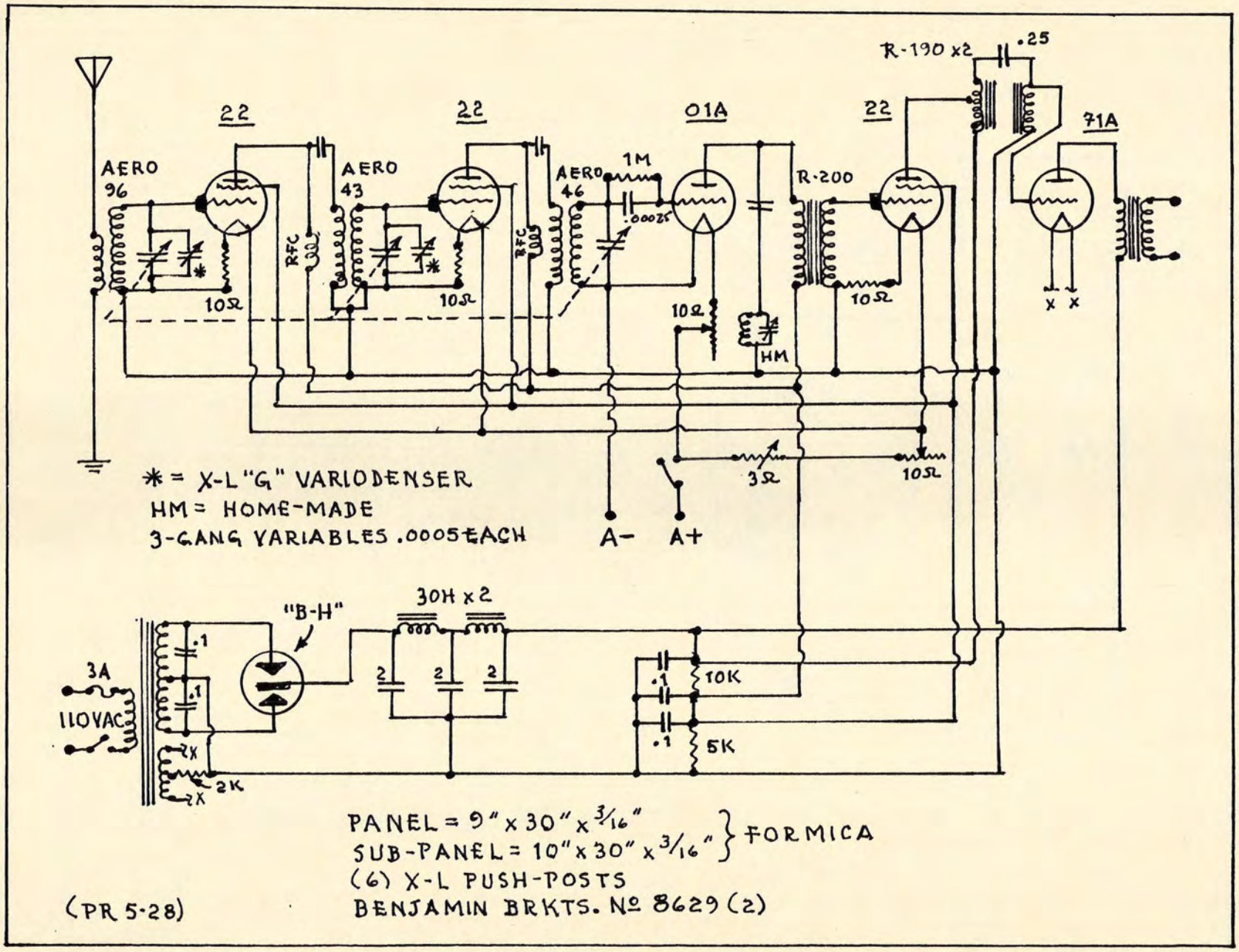

TOROIDAL COIL T.R.F. RECEIVER, 1925

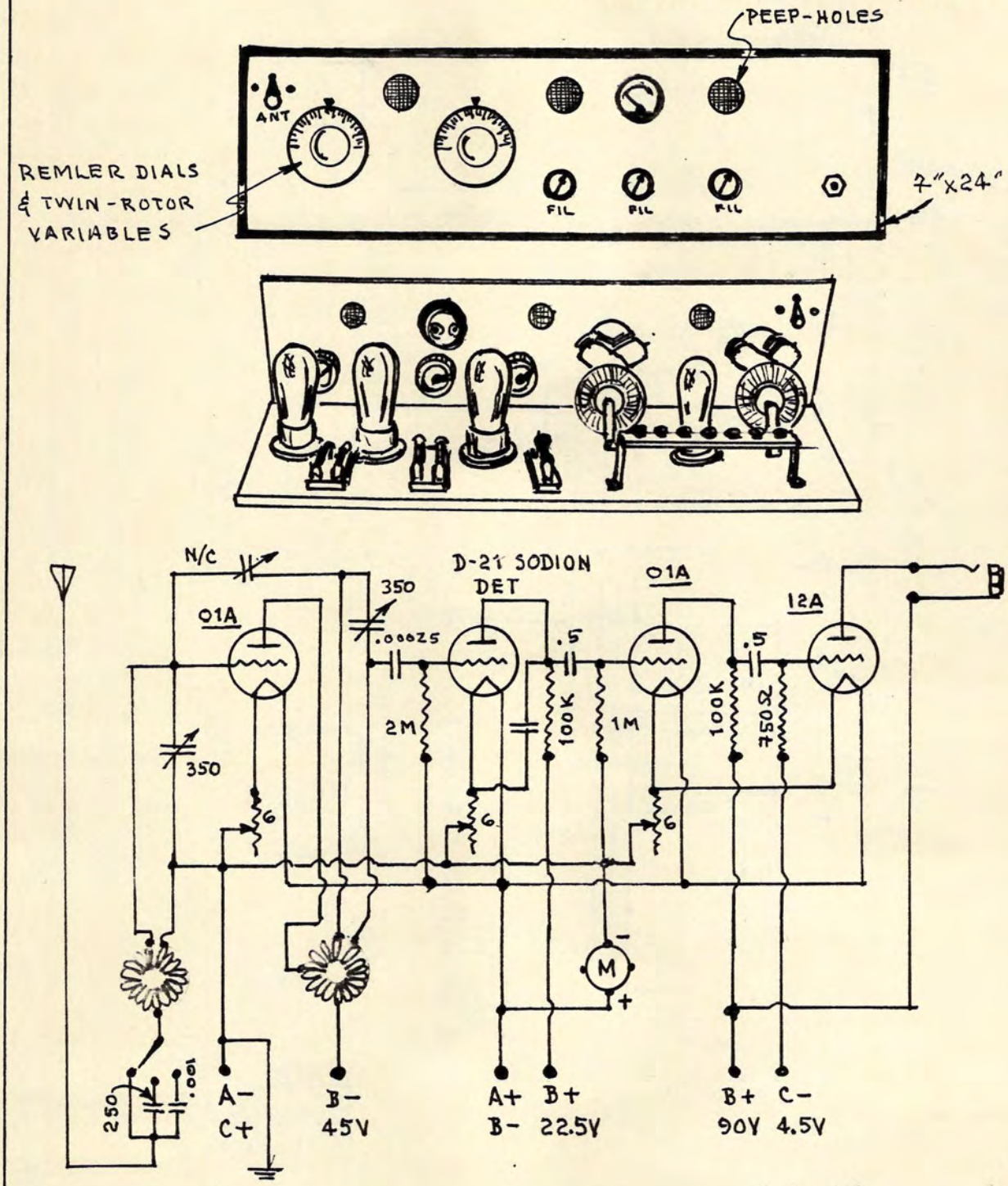

"TRAVELLER" TOROIDAL TRF, 1926; Sht. 1

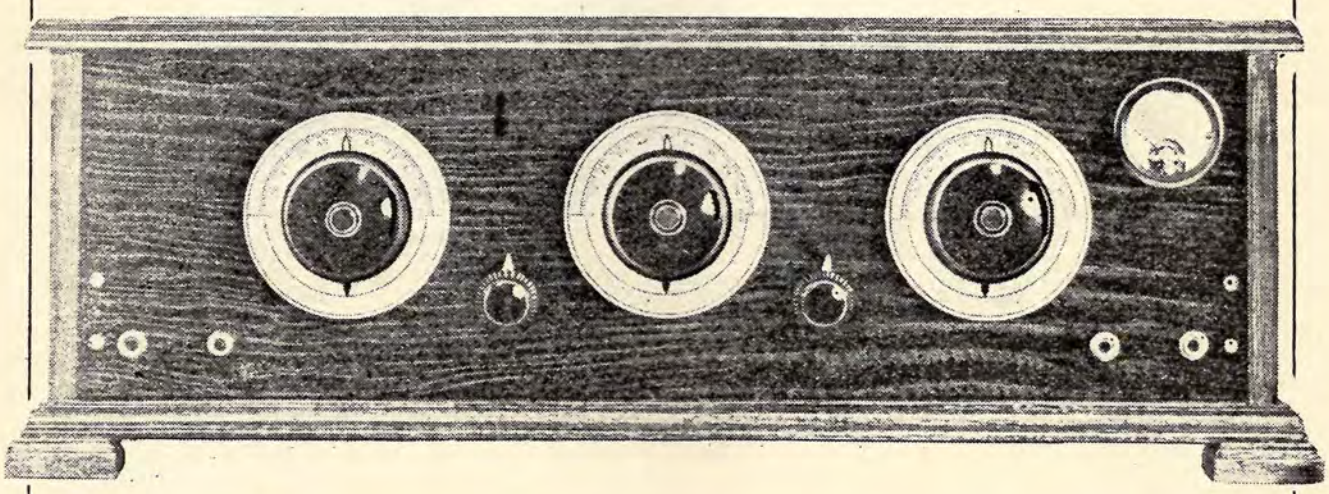

This TRF came into being during the toroidal coil vogue, and is simple to construct and quite efficient. Most of the components are still about, the THOROLA toroid coils along with the KARAS variables and the rather rare dials made briefly by DIALOG, being the only exceptions, which should be abided by. The left rheostat controls regeneration: the middle and right-hand dials will track fairly close together, the left-hand dial will run about ten or five divisions below the other dials. When tuning originally, the variable BRADLEYLEAK is adjusted for maximum sensitivity, and then left alone.

The antenna has a flexible lead with a clip, which will be found useful in seperating two strong locals, attaching the clip to Point A on the antenna coil. The jack on the left can be used for plugging-in a loop. If a strong signal blasts, connect a ,00025 to .01 MF across either AF transformer. A straight forward and efficient set.

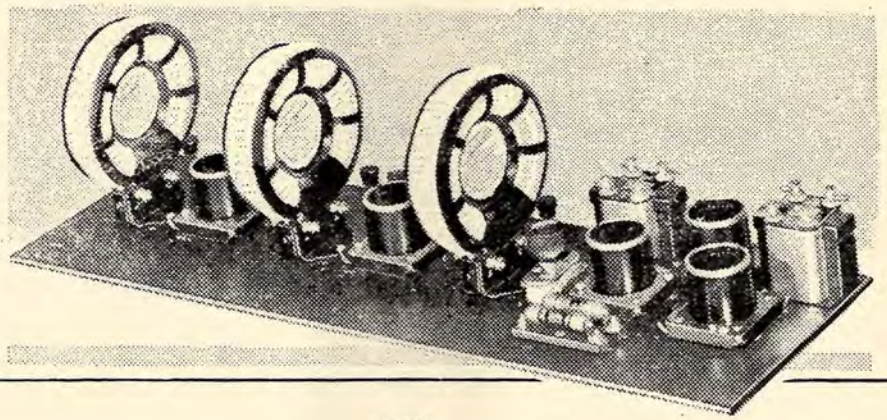

"TRAVELLER" TOROIDAL TRF. 1926: Sht. 2

(Original Cost = $85.71.)

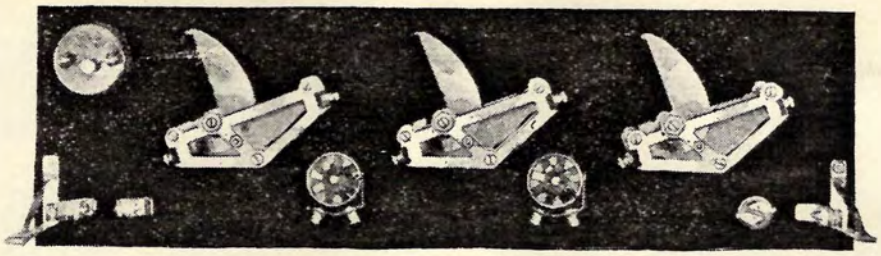

PANEL - REAR VIEW

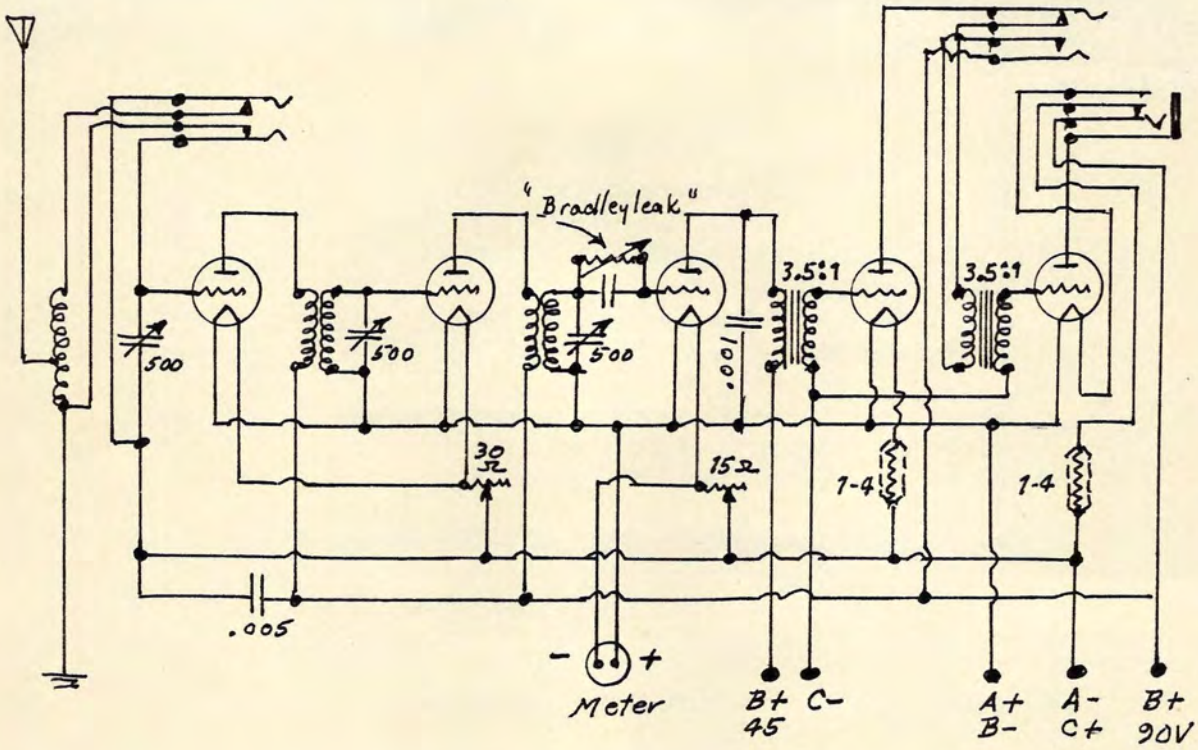

MAIN PARTS

Thorola Toroidal Coils (3)	Panjab Jacks (3)
Karas 500mmf Variables (3)	Jewell Voltmeter 135 O-S
Dialog Vernier Dials (3)	Thordarson AF Xfrmrs. (3)
Cutler-Hammer Rheostats	Walbert Sockets (5)
Bradleyleak & Switch	Erla Fixed Condensers
1-A Amperites (2)	Formica Panel 7" x 24"

(RD)

"TRAVELLER" TOROIDAL TRF, 1926; Sht. 3

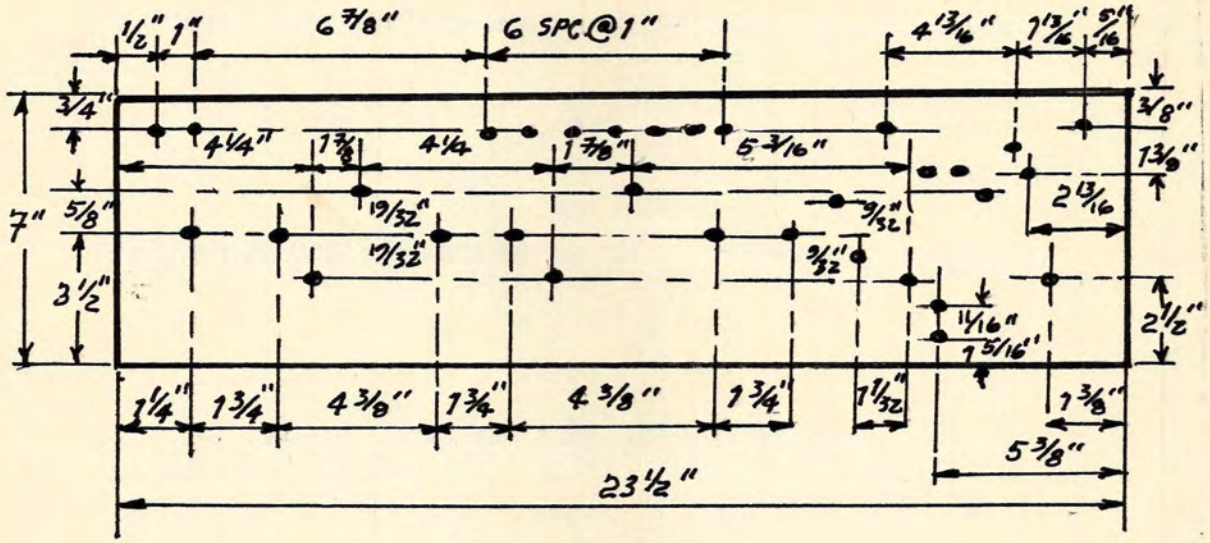

SUB-PANEL

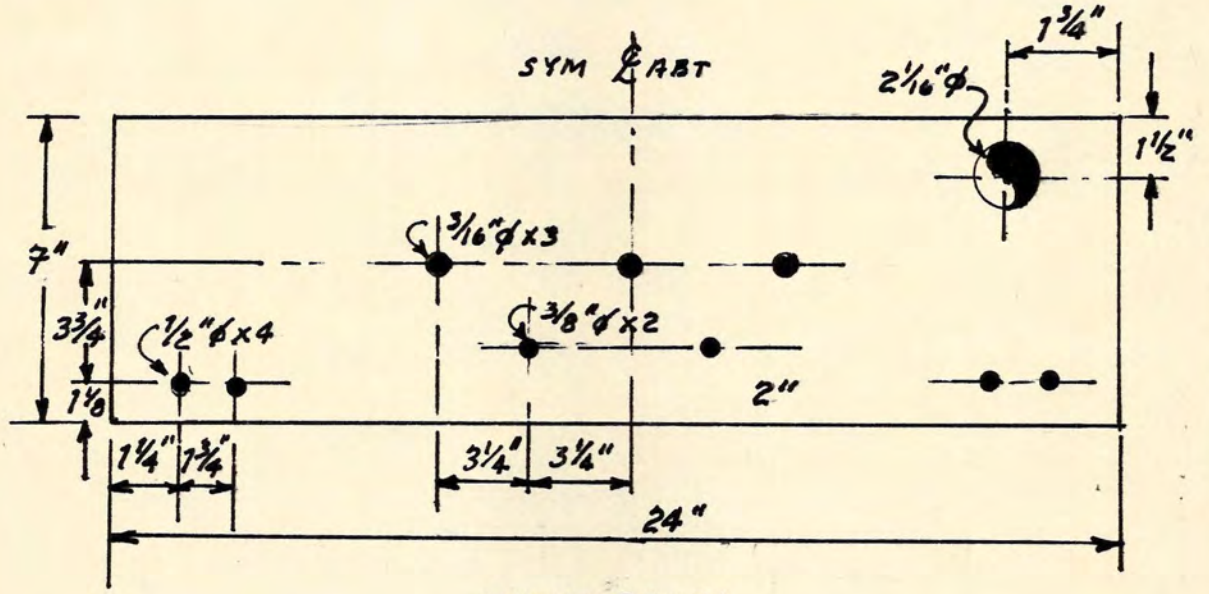

FRONT PANEL

TUFTS COLLEGE "D"-COIL TRF, 1925

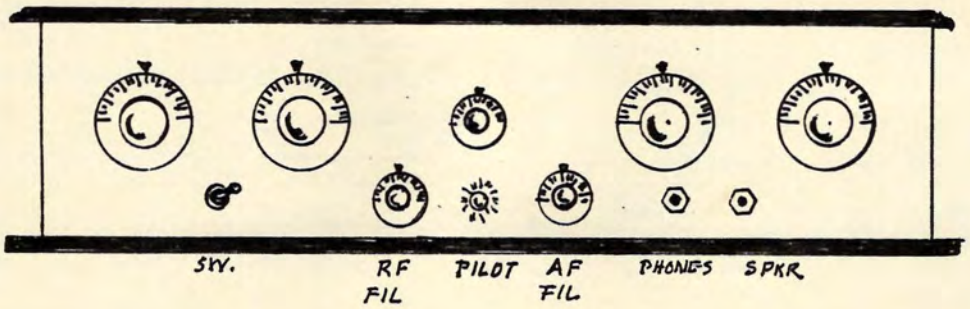

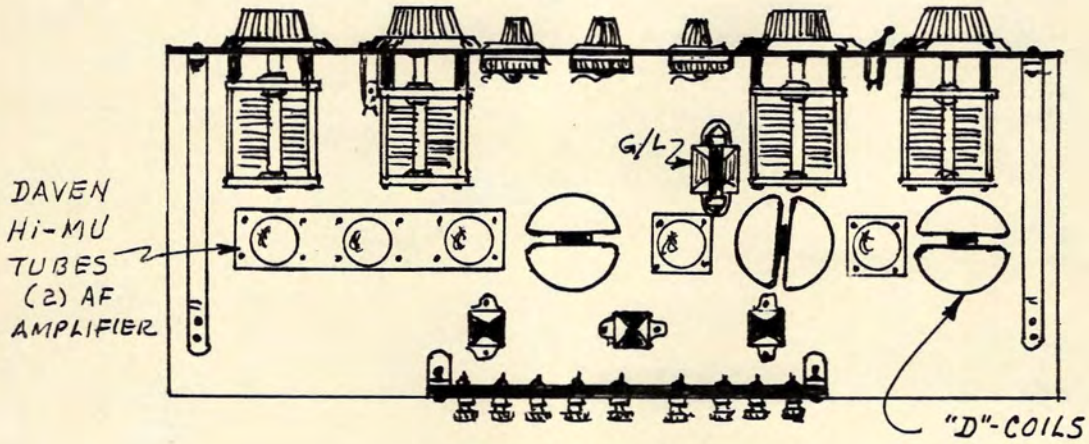

(WA-1924-1925) (3) Henniger "D"-Coils.

NOTE:

There was really nothing exceptional about this circuit, other than the Henniger D-Coils. The Engineering class at Tufts College, in Boston, was given the assignment of coming up with a neat layout of the baseboard, and a symmetrical panel. You may wish to use this layout for other sets with or without D-Coils.

TYPICAL REGENERATIVE NEUTRODYNE, 1925

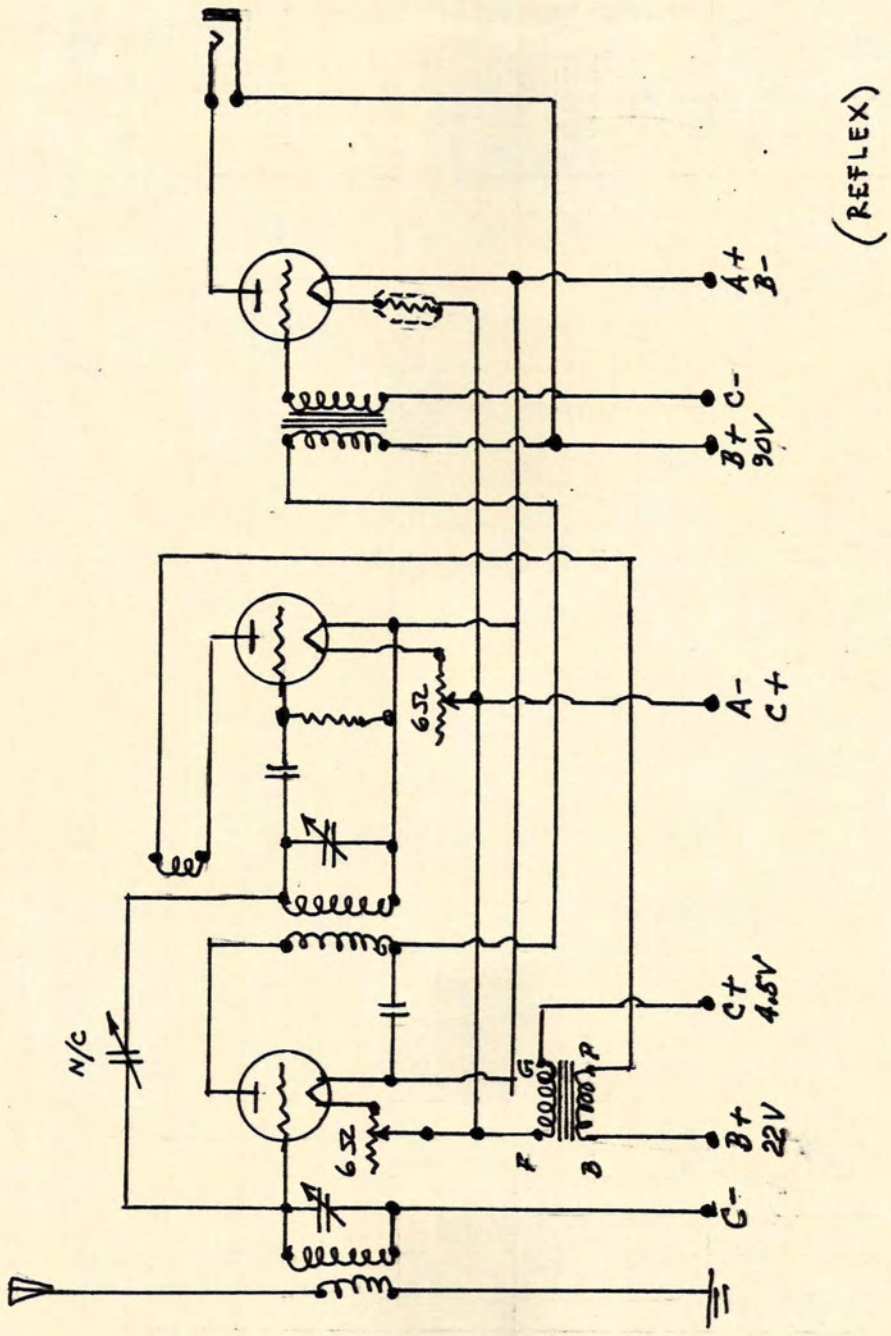

U.H.F. RECEIVER, G.B., 1937: W.W.5-7.
(Sht. 1)

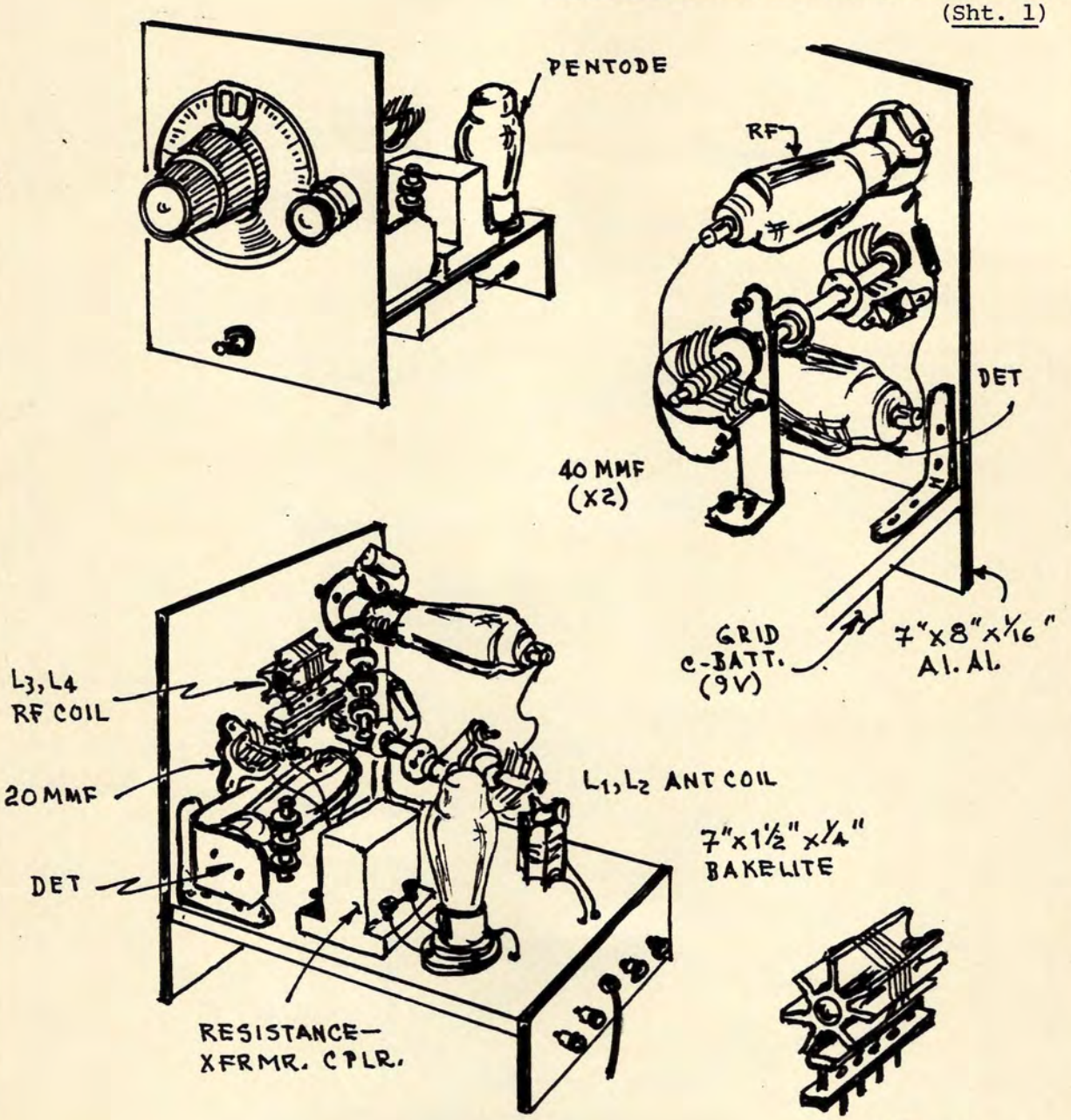

HIVAC SG 220 SW (1) 4-PIN
HIVAC D210 SW (1) 4-PIN
HIVAC Y220 (1) 5-PIN
PI-WOUND SW CHOKES (2)
AF OUTPUT CHOKES (RESISTORS)
UTILITY "MICRO-DIAL"

(WW 5-7-37)

U.H.F. RECEIVER, G.B.: 1937; Sht. 2

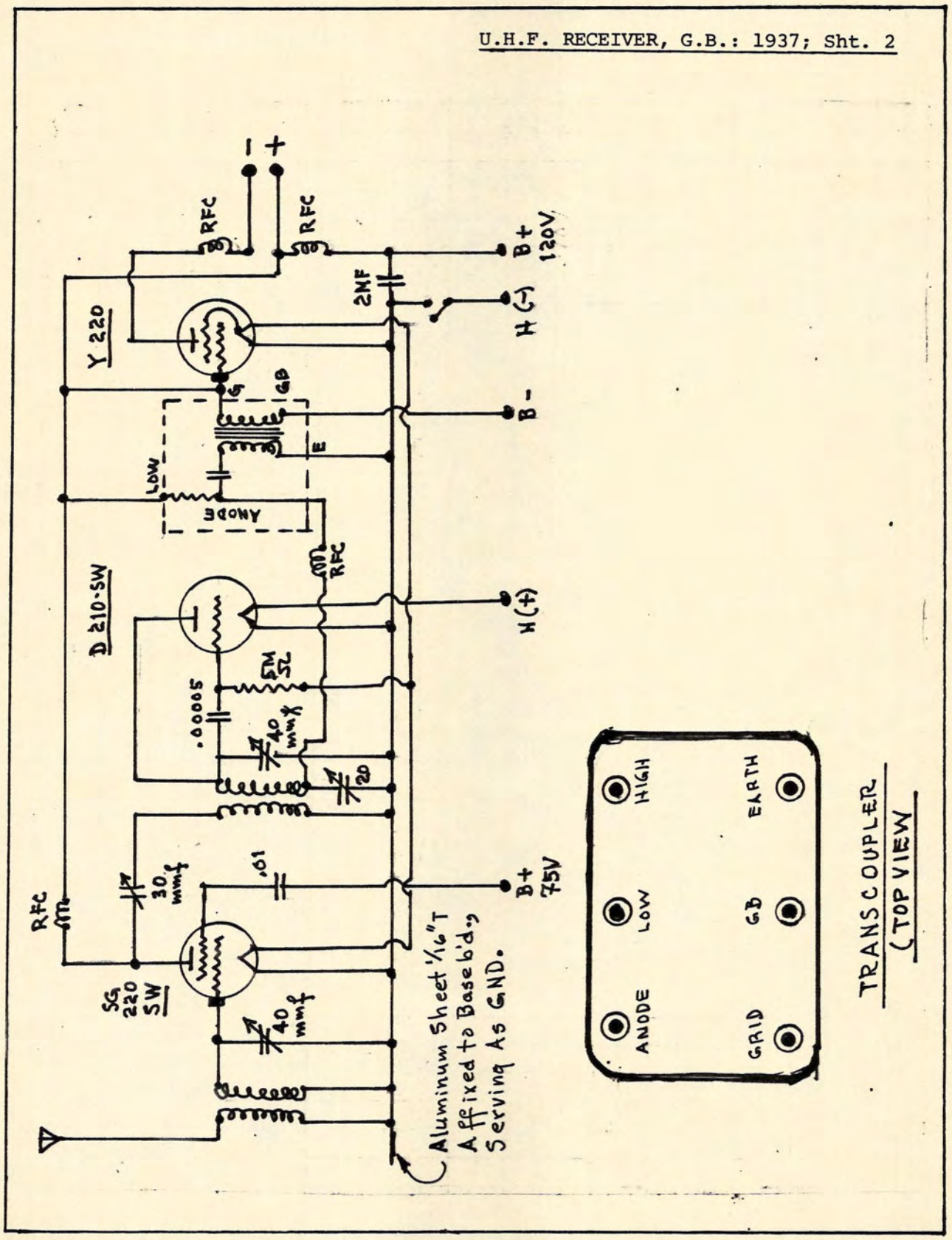

U.H.F. RECEIVER, G.B.: 1937;Sht. 3

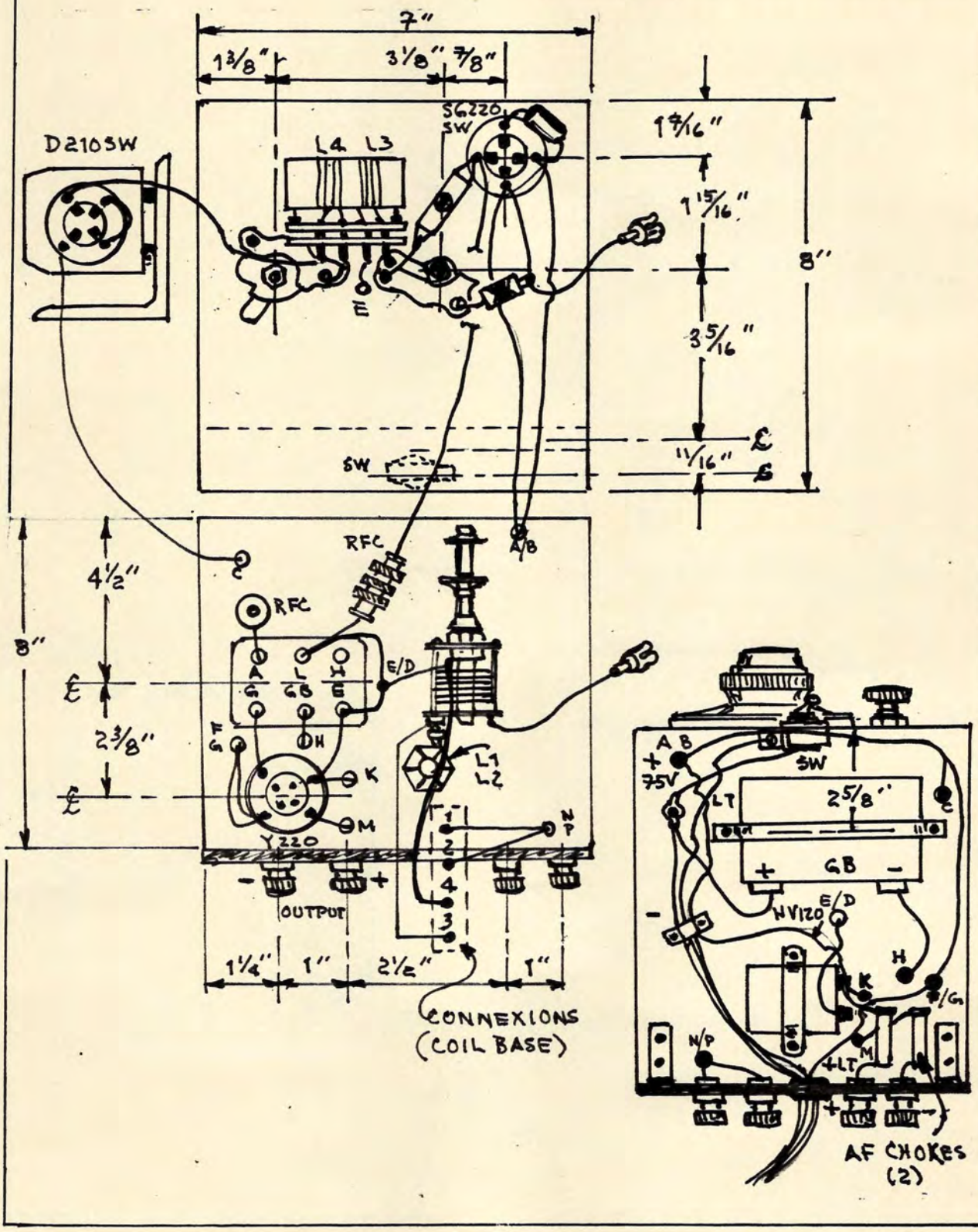

"UNIDYNE/SOLODYNE". 1927 (G.B.)

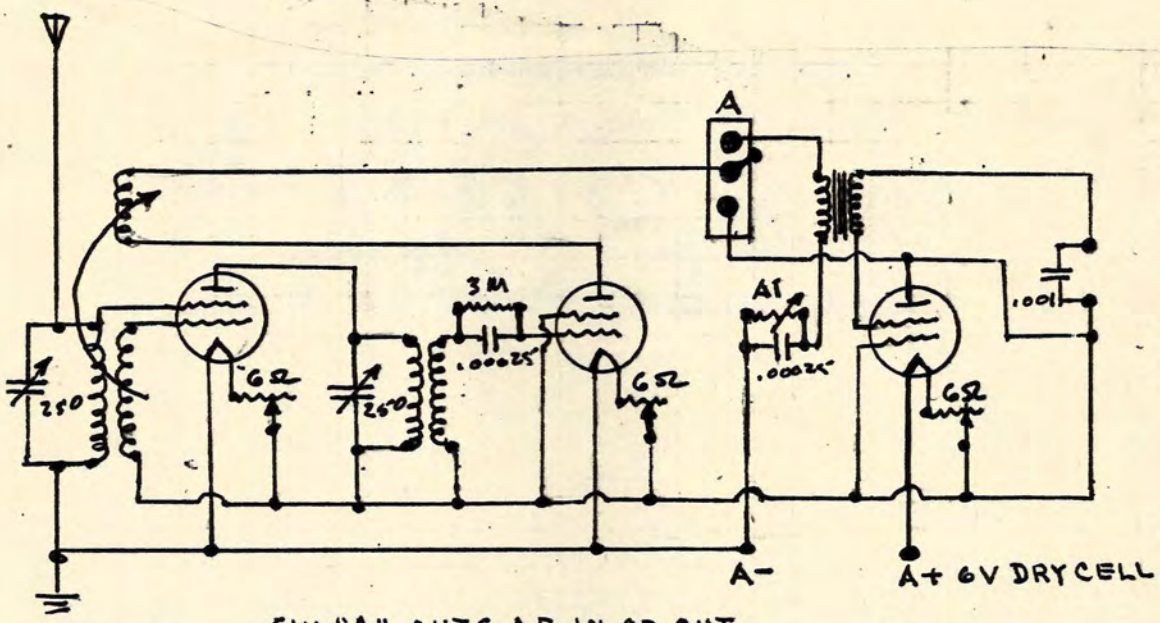

SW. "A" CUTS AF IN OR OUT.
NO "B" BATTERY EMPLOYED.

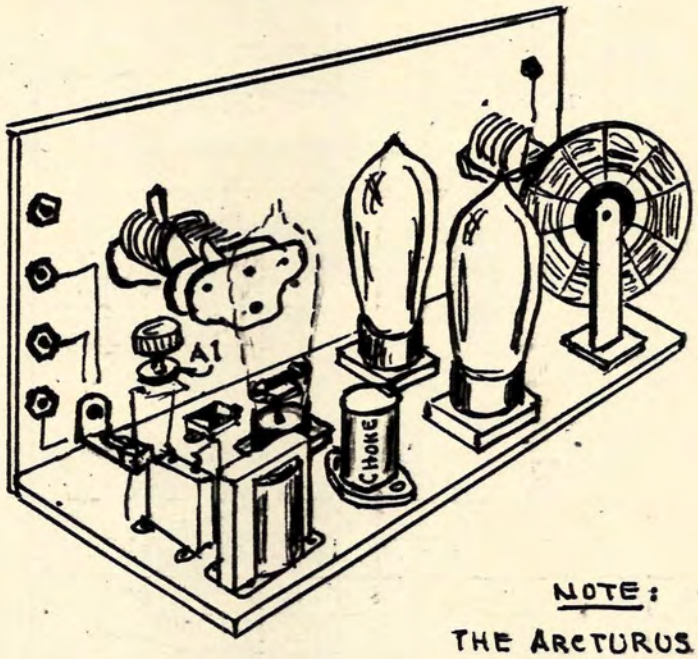

NOTE:
THE ARCTURUS 56
"SPECIAL" TUBES
MAY BE USED.

UZMANN LONG-WAVE RECEIVER, 1926
1,000 to 3,000 Meters

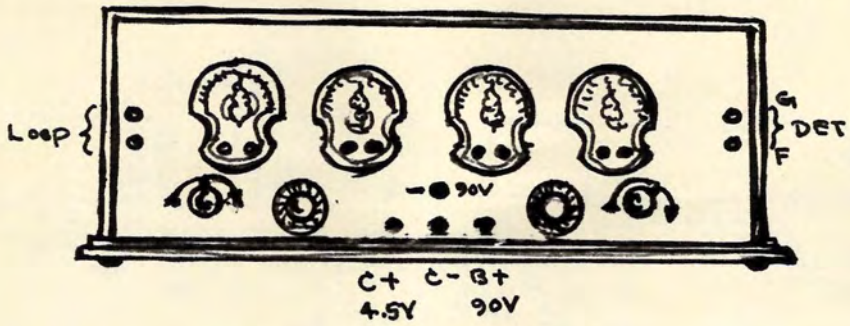

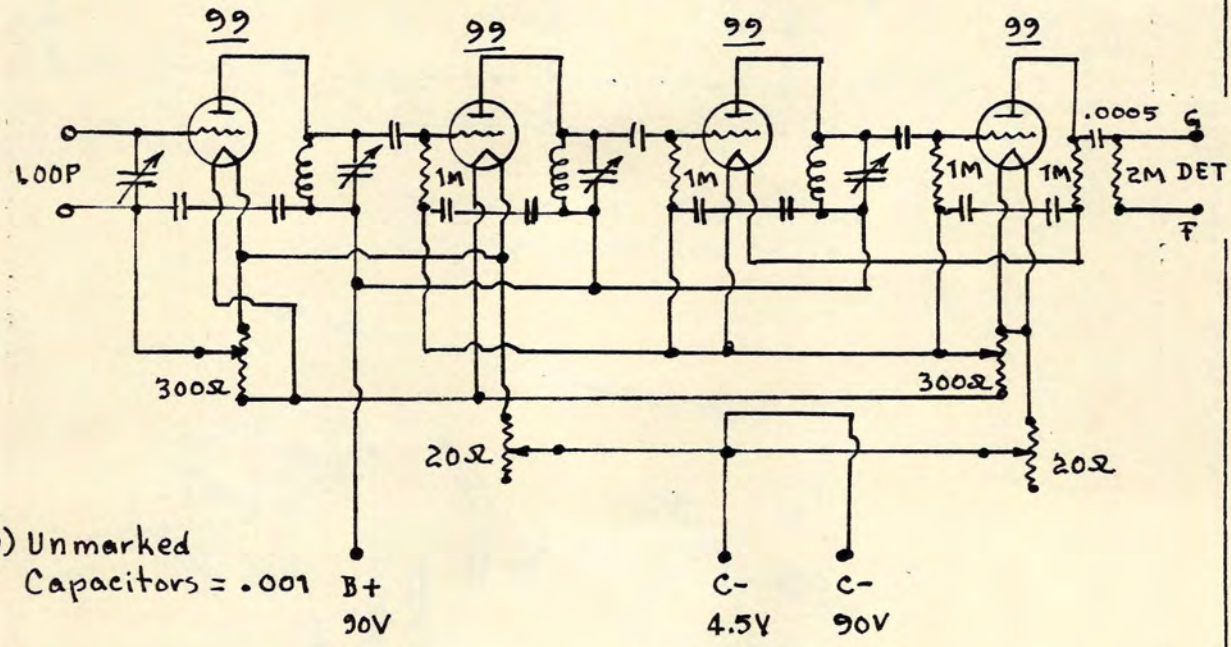

(9) Unmarked
Capacitors = .001

NOTES:
1. Coils = 200 Turns, Honeycomb (3)
2. Variable = 43 Plates (.001 MFD) (4)
3. Loop = 30 Turns, #20 DCC copper wire.
4. 300-ohm pots. = biasing grid 1st stage, and neutralizing all others.
5. Tubes mounted on3" x 10" x ¼" Bakelite strip
6. Note the application of -90V.

(RH-4-26)

WADE-THORDARSON RECEIVER, 1926
(Sht. 1)

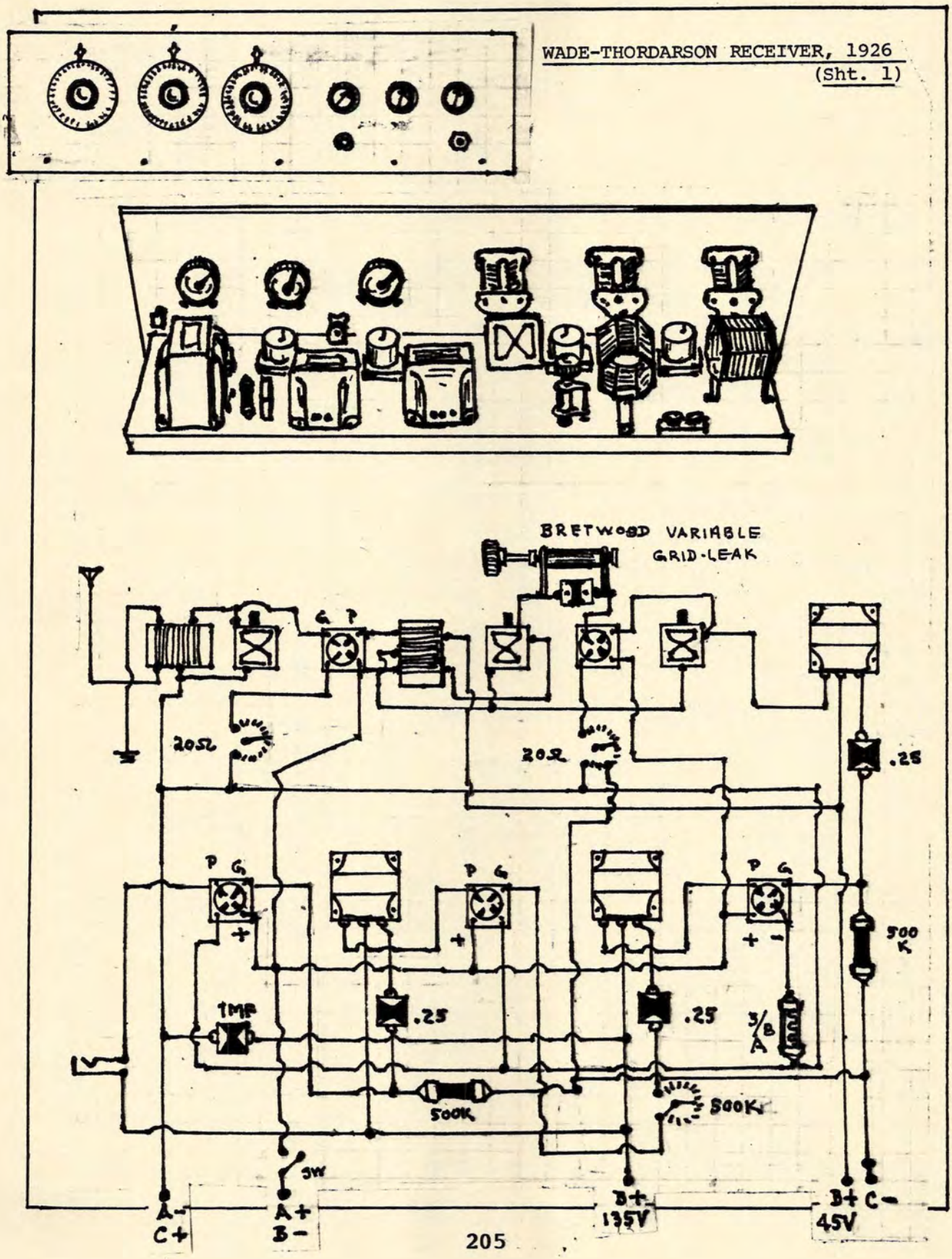

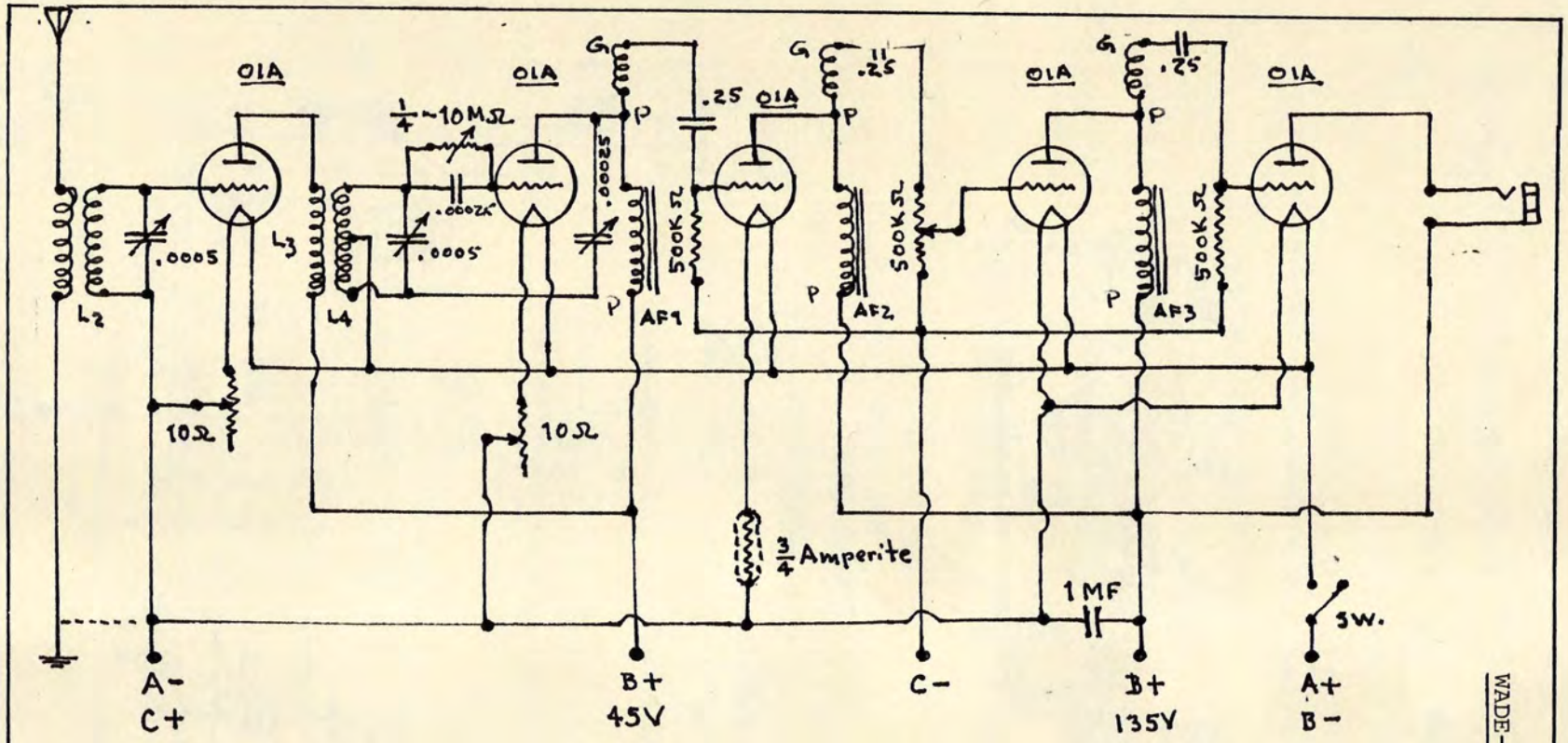

L_1 = 6 T, #22 DCC, PRI
L_2 = 60 T, #22 DCC, SEC } .250" Separation
L_3 = Same as L_1.
L_4 = Same as L_2, w/ Tap @ 14 T
Coil Forms = 3.25" ø × 4" High.

AERO COILS MAY BE USED.

PANEL = 7" X 24"
BASEBOARD = 8" X 23" X 5/8"

AF Impedances Were Samson AF units, & nos. are Samson numbers.

NOTE

SUMMIT TOROIDAL COILS MAY BE USED, w/ A- GOING TO EARTH (dotted line), & DAVEN RESISTANCE-COUPLED AF UNIT MAY BE SUBSTITUTED FOR SAMSON AF IMPEDANCES.

HARTLEY OSCILLATOR USED.

WADE-THORDARSON RECEIVER, 1926 (Sht. 2)

THE WALBERT ISOFARAD RADIO RECEIVER

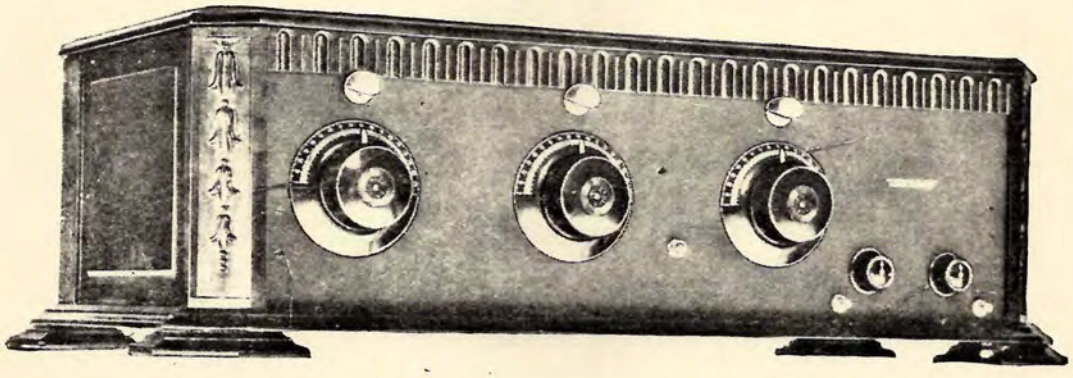

The adaptation of a bridge-balancing circuit fascinated a lot of the early radio engineers, and can be found in Lacault's "Strobodyne" and Gearhart's "Quadraphase". The "Isofarad" was the name WALBERT gave their adaptation. It was neither better nor worse than any other, but the set was easy to construct. WALBERT was an aggressively active manufacturer of radio and electrical components, with an impressive export business. They produced quality parts, and their vernier dials, shown in the cut above, were among the best. They also had the habit of designing an item and then selling the rights to others - their "Panelite", for example, wound-up being offered for sale to the home-constructor by CARTER.

There were two versions of the WALBERT "Isofarad" TRF, one of five and the other of six tube configuration. Both performed equally well, and, as mentioned, were easy to construct.

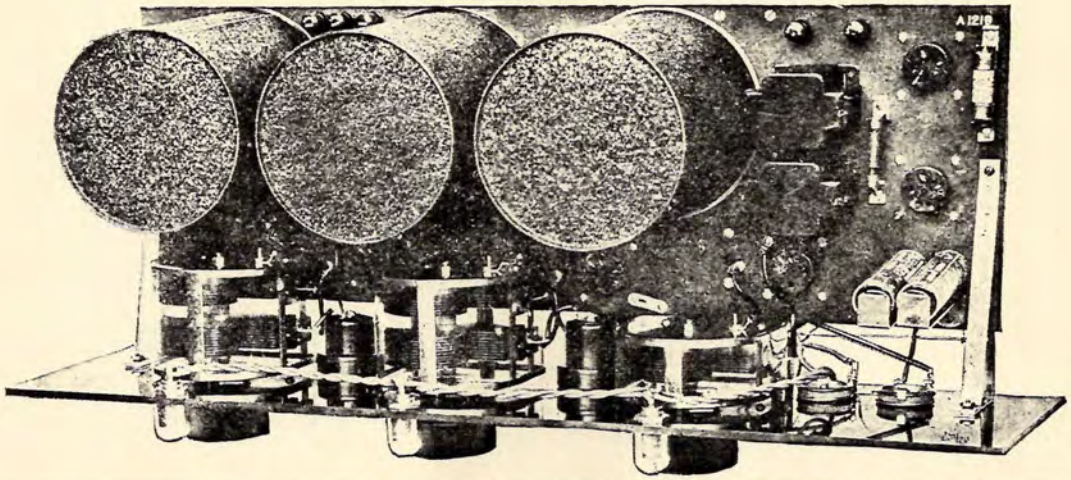

WALBERT "ISOFARAD" TRF, 1926 ($85 Kit);Sht.1

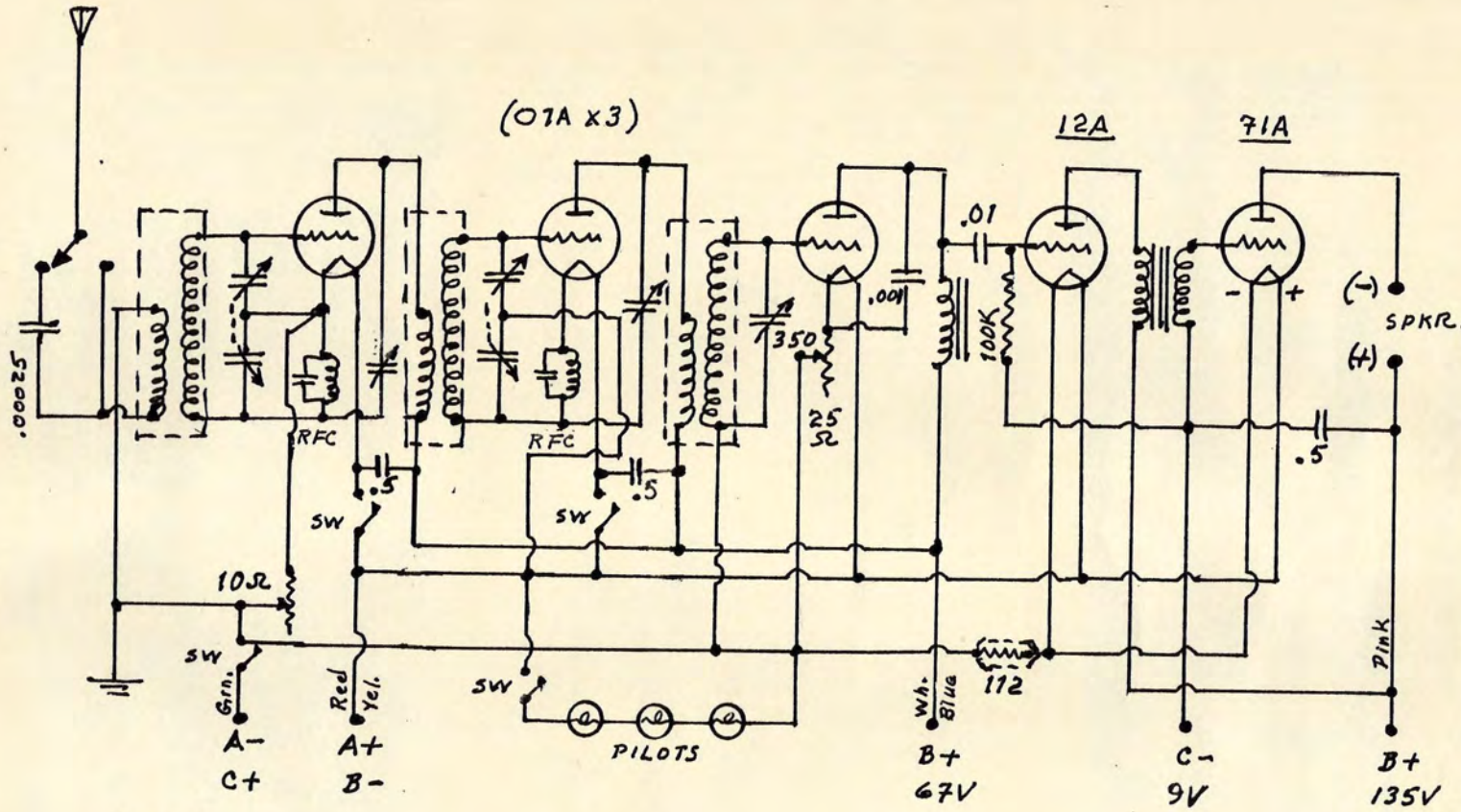

NOTE:

This was the 5-Tube version; the 6-Tube version was identical except for an added stage of RF. The added stage was also identical to the RF stages shown above.

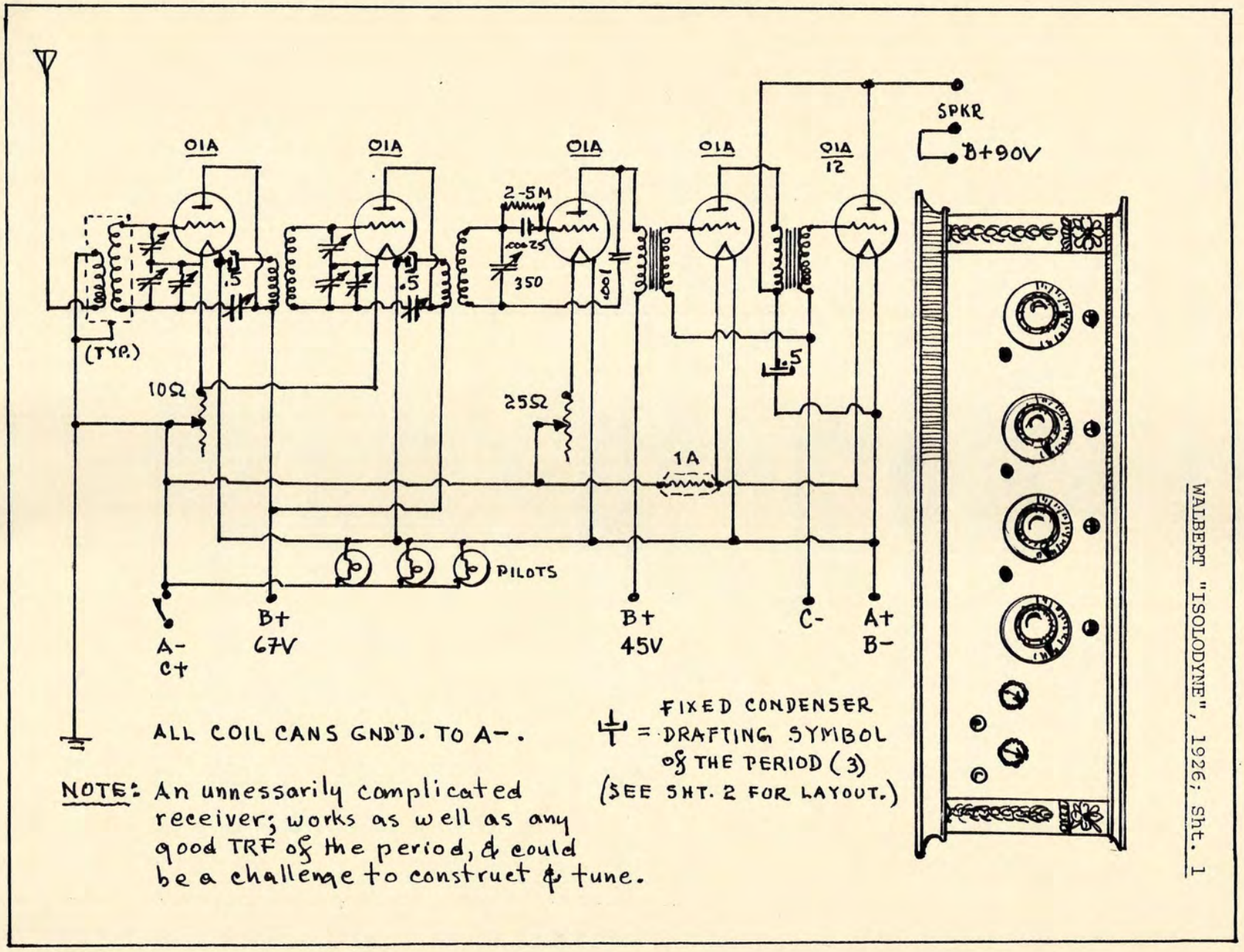

WALBERT "ISOLODYNE", 1926; Sht. 1

WALBERT "ISOLODYNE" TRF, 1926; Sht. 2

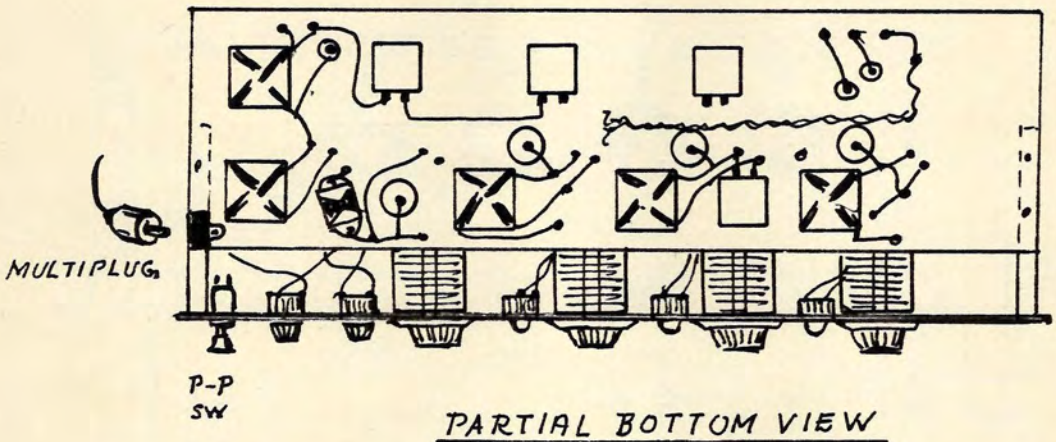

PARTIAL BOTTOM VIEW

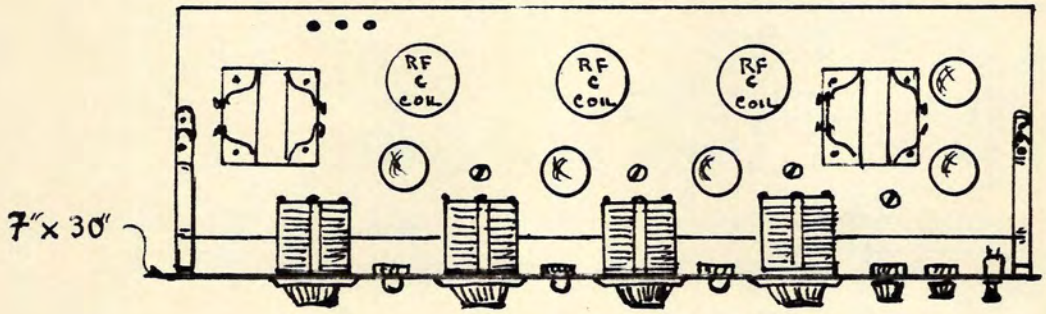

PLAN VIEW

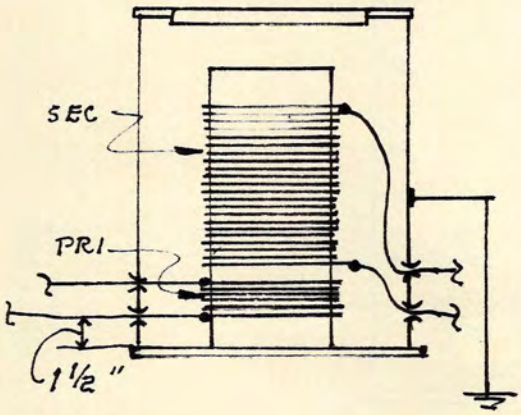

TYPICAL "ISOFARAD"
RF COIL DETAIL

1. Copper Can, Grounded.
2. 1½" clearance between Coil & can on all sides.
3. Leads feed-through are insulated from can.
4. WELTY coils similar.

(CB 6-26)

"WALBERT MADE IT FIRST!"
(Advert Slogan)

"PANELITE" by WALBERT

Nickel	$1.00
Gold	$1.25
Lamp	0.20

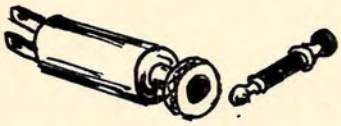

LOCK-SWITCH

Nickel	$0.35
Gold	.50
Plunger	.15

"ISODONS"

An encased 3-plate variable (midget) 5 or 7 to 50 mmf; originally designed by WALLBERT for the CANOTEX Co.

GENERAL NOTES

The first two variables were special tandem type, SLF; the condenser at the front was 500 mmf; the rear one was 250 mmf. Both were controlled by the same shaft.

The "Isodon" was a 3-plate variable of the midget class, 7 to 50 mmf. They were called Balancing Condensers by WALBERT, but any neutralising condenser could be used.

The WALBERT "Univernier" was a well-made and superior type of dial, and should be used, if available.

Panel = 7" x 26" x 1/8".
Sub-Panel = 8" x 25" (Bakelite).
6-Wire Battery Cable.
25' rubberised flexible wire used, all copper.

General Parts

(3) Panel Brackets.
(3) Sub-Panel Brackets.
C-Battery Mounting Clips.
(3) .5 By-Pass.
.001 & .01 Fixed Condeners.
1-A Amperites, or Brackstat #24.
100K Resistor.
(5) Binding Posts.
(3) "Panelites" (WALBERT).
(2) Lock-switches.
(2) RFC 85mH.

WALKER "MULTI-UNIT" (ALSO KNOWN ORIGINALLY AS "FLEXI-UNIT); 1928; Sht.1

Geo. Walker of Chicago was the prime contractor and distributor of the Victoreen radios and Victoreen components. The unit described herein was introduced in 1928, and the design remained essentially unchanged through 1930. It was a unique instrument, but its capabilities seems to have intimidated most. I have been unable to find an original "Multi-Unit", but I have constructed the basic circuit, and found that, given proper conditions, the unit will do all that Walker claimed for it. Walker also designed and marketted a dual plug-in SW coil, and later joined forces with a couple of mail-order houses. The coil and his collaborative SW receivers can be found detailed in Volume III.

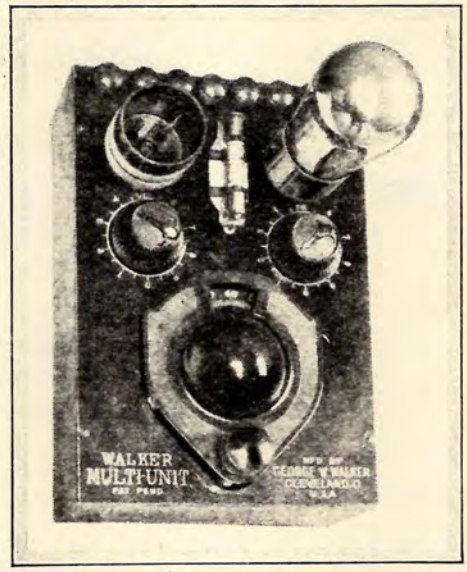

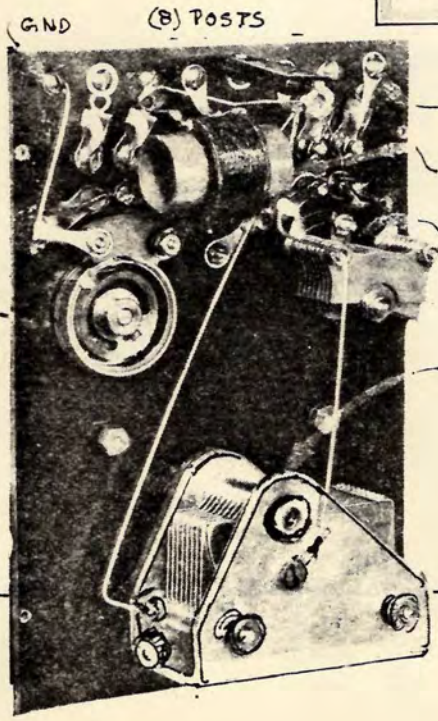

ACCESSORIES

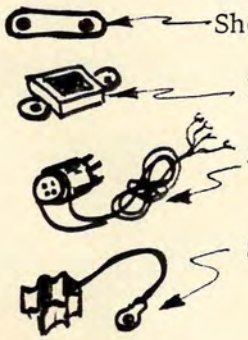

(CB 9-29)

WALKER "MULTI-UNIT" NOTES; Sht. 2

The "Flex" in the original name given this unit derived from the fact that it was flexible enough to do most anything required by the radio enthusiast. For example, the unit, all models,

Short-Wave Receiver	Short-Wave Adapter
Broadcast Receiver	Wave-Meter
Crystal Receiver	Remote Control Adapter
Screen-grid Pre Amp.	Shielded Grid SW Adapter
AF Oscillator	AC SW Adapter #2
Single Dial Converter	Wave-Trap
Extra stage of TRF	Experimental unit.

Granted, its sensitivity and selectivity were limited - that is, you could not sit in Asbury Park and expect to tune-in the BBC; but it would pull in KDKA in the SW mode.

One use not listed above was that as an unmodulated RF oscillator. The selexion of a tube was also flexible, in that you could use a 99, 01A, 12A, 22, 24A, 26, 40. All tuning was done with the unit, not the receiver. The following is a list of components:

350 MMF Variable	450 MMF Variable
100 MMF Midget	30-ohm Rheostat
7M-ohm Grid-leak	.0015/.0035 Condenser
RFC	By-Pass condenser
8 Binding posts	4-Prong socket
5-prong socket	Adapter cable

The original unit measured 5" x 7" x 3", cast aluminum base with a shielded Bakelite panel. An attractive unit, similar in its visual appeal as the Electrad "Truvolt" divider, q.v.

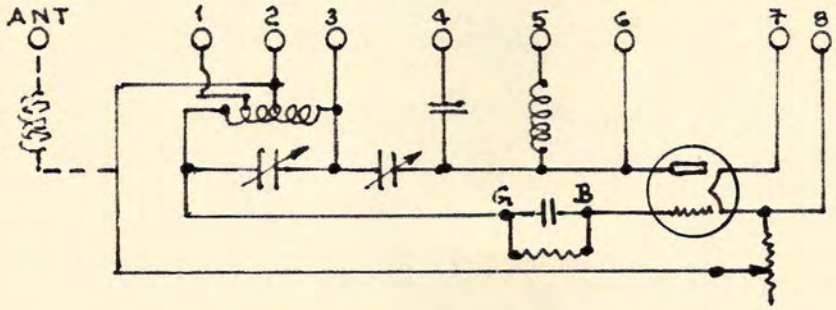

THE FUNDAMENTAL ELECTRIC CIRCUIT

WALKER "MULTI-UNIT" NOTES; Sht. 3

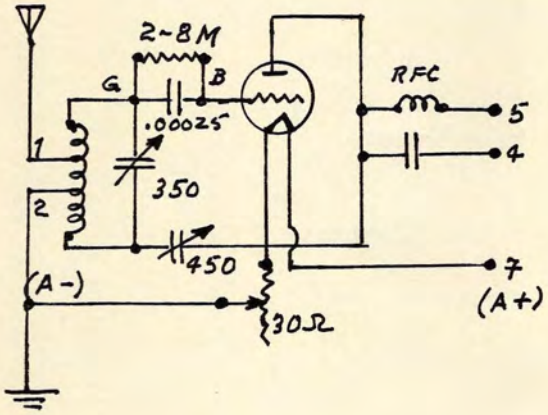

EXTRA STAGE OF T.R.F.

When used with sets having 99 tubes, set FIL at 3; with 6V tubes, FIL (TRIM) fully CW.

(Numbers refer to binding posts.)

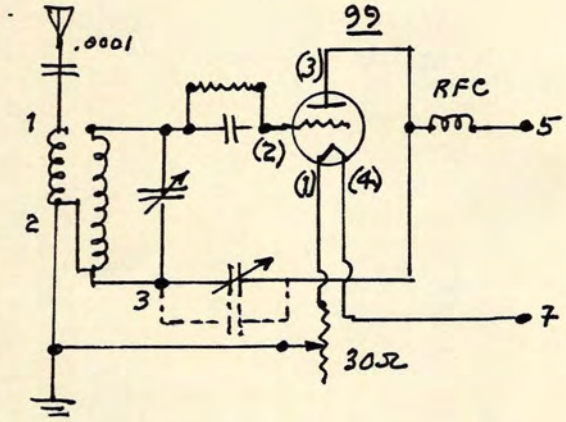

SW. ADAPTER, BATTERY SETS

Tuning is very sharp.

FIL at 3 with a 4.5V filament supply.

Numbers around tube are for the base of a 99 tube.

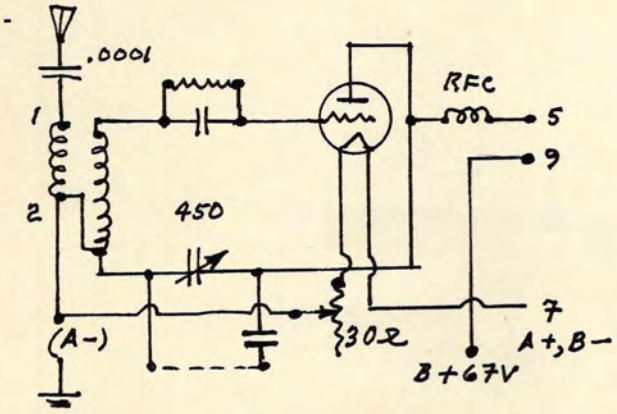

SINGLE TUBE RECEIVER NO. 1

45V battery may be used, depending on the tube employed.

RFC and .0001 capacitor may be omitted with a 45V battery, and 3 and 4 deleted.

Dotted line is shorting link.

WALKER "MULTI-UNIT" APPLICATIONS
(Sht. 4)

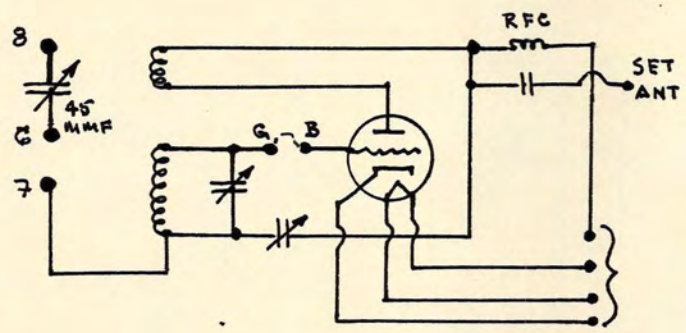

AC PRE-AMPLIFIER

Remove G/L & short terminals "G" & "B".

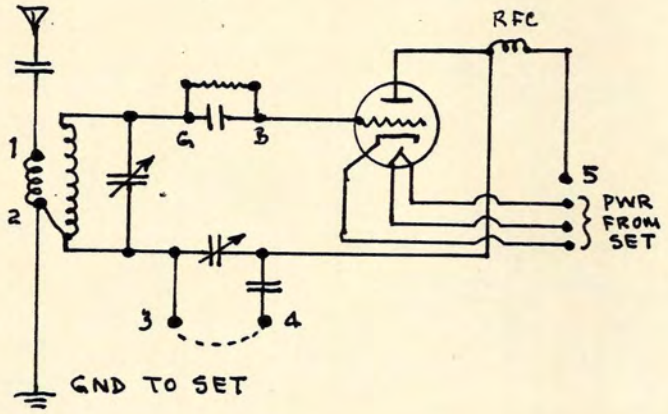

SW ADAPTER, AC SETS

Set FIL (TRIM) at 0. If set ANT is not inductive, ground unit through the set.

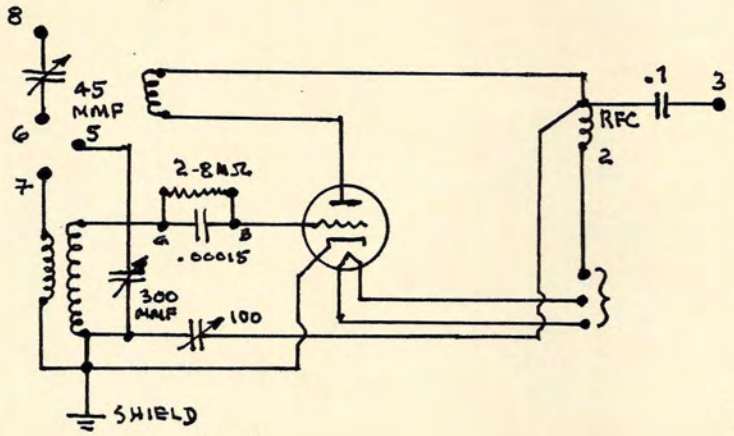

SW ADAPTER, LATE

15-200 Meters.
5-Prong coil socket.
Use rcvr. AF system.
Cast aluminum shield cover for unit used originally (1929).

(CB 9.30)

WALKER "MILTI-UNIT" APPLICATIONS: Sht. 5

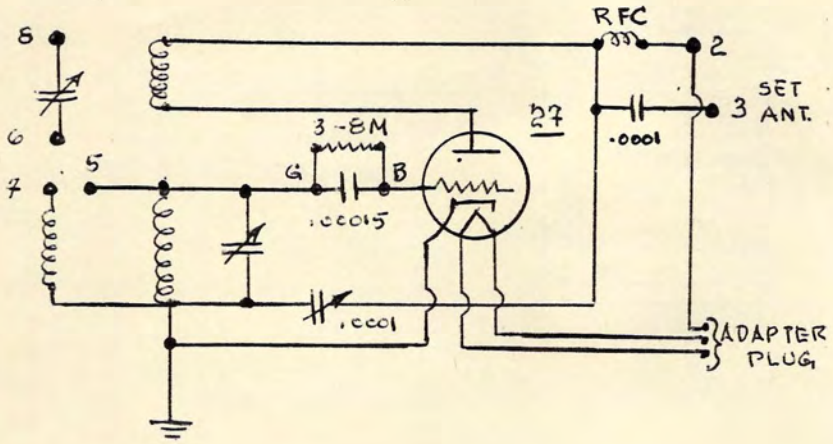

AC SW ADAPTER, #2

15-200 Meters.

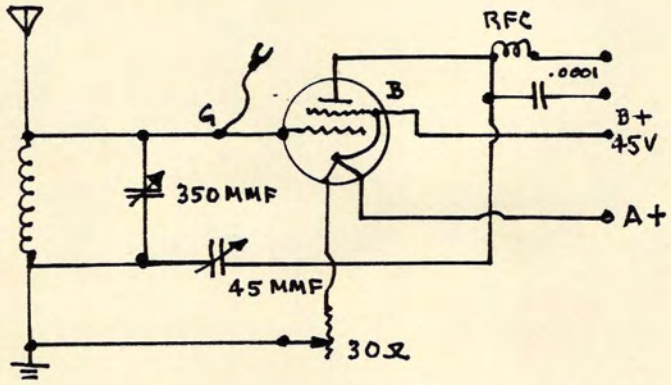

SCREEN-GRID AF AMP.

Remove G/L.
Remove 1st RF tube from set & insert plug
GND remains on set.
FIL @ 3V; VOL @ 4.
22 Tube may be used.

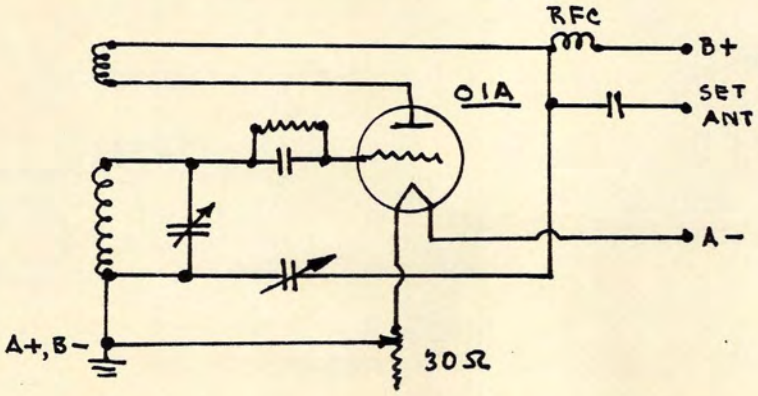

AC RF & AUDIO OSCILLATOR

Battery may be incorporated.
99 or 01A tubes.
15-550 Meters.

TRADE WORKRITE MARK

NEUTRODYNE RADIO

If you've ever thought you would like to play around with a simpler "Neutrodyne", I include this one set from Work-Rite Manufacturing Company, of Cleveland.

While Work-Rite items are shown, such as their own version of a "Neutrodon" and the 15-ohm resistance cartridges, a conventional 15-ohm resistor can be substituted, and most any neutralising condenser, balancing condenser, or any other name, can be used, such as Bremer-Tully, X-L, Freshman, Muter. etc.

Parts manufactured by Work-Rite were competent, being neither better nor worse than a hundred other manufacturers. They did produce a sensible 3.5" Ø dial, made of hard rubber, unfortunately, that showed some thought, in that the dial was moulded with a secondary knob that stood out from the face of the dial by three-eighths of an inch, thereby affording you a comfortable grip for precision tuning. In profile, the dial looked like a side-view of a Mayan temple, with stepped terraces, although the Mayans must have had small feet, as the steps of all Mayan temples in Yucatan are very narrow

The panel was 7" x 24", and was backed by a thin brass sheet covering the entire back of the panel, and of course drilled through with the panel. Work-Rite referred to it as an "Anti-Capacity Shield".

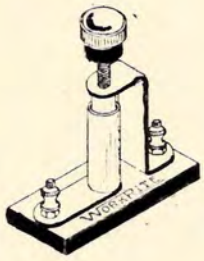

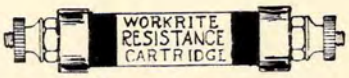

WORK-RITE's 1923 "NEUTRODYNE"

When Prof. Hazeltine's "Neutrodyne" principle broke the strangle-hold of The Octupus on commercial circuits, there was the inevitable rash of "Neutrodyne" circuits from independent radio manufacturers. Like Sears-Roebuck shoes, they could be qualified as good-better-best. The WORK-RITE "neutrodyne" of 1923, revised in 1924, could be considered as "good".

It is probably the simplest of the "Neutrodyne" circuits to construct, and with the exception of their neutralising condensers and resistance cartridges, most any similar part could be employed. The neutralising condensers were different in that they consisted of a cardboard cylinder within a metal cylinder, that was moved up or down by a thumb-screw. The design concept may have influenced the initial neutralising condenser of Bremer-Tully in their "Counterphase" series. The B-T condenser consisted of a thin-walled glass cylinder within which a brass plunger was moved up or down, mounted on a Bakelite base. The unit did work surprisingly well, but a year later B-T went to an encapsulated unit, as the glass cylinder was too easily broken.

The original audio transformers specified were Jefferson's with a winding ratio of 1:1, which was rather odd, but they do work, as my own construction of the WORK-RITE 1923 "Neutrodyne" demonstrated, In the original circuit, V99s were called for; this was changed a year later to O1As, with a soft detector, usually a 200-A. The 15-ohm cartridge resistors were employed for the V99 tubes when a 6-volt filament supply was used. These cartridges may be deleted if you use O1As with no adverse effect.

Audio output was quite adequate to fill a room via a PM speaker. My own experiments showed that the miniature mantle-clock type of Stewart-Warner produced the best tone, and increased volume by 100% over speakers made by Peerless, RCA, Rola, Rauland, Tower.

Like all "Neutrodynes" of the era, the WORK-RITE was extremely critical of adjustment, and body-capacitance was enormous when you set about to adjust the neutralising condensers. The knurled knobs were handy but, slotted head for an insulated screw-driver would have obviated this annoyance. The dials will track reasonably well, but you will have to get used to having the same station appearing at two or three spots on the dials. The 2nd NEURTO STAGE dial was the critical control, as it also served as a volume control. Tubes were prone to become paralysed from excessive voltage, and de-tuning was the only method to reduce the problem. With high-impedance head-phones, I found that the problem was less acute.

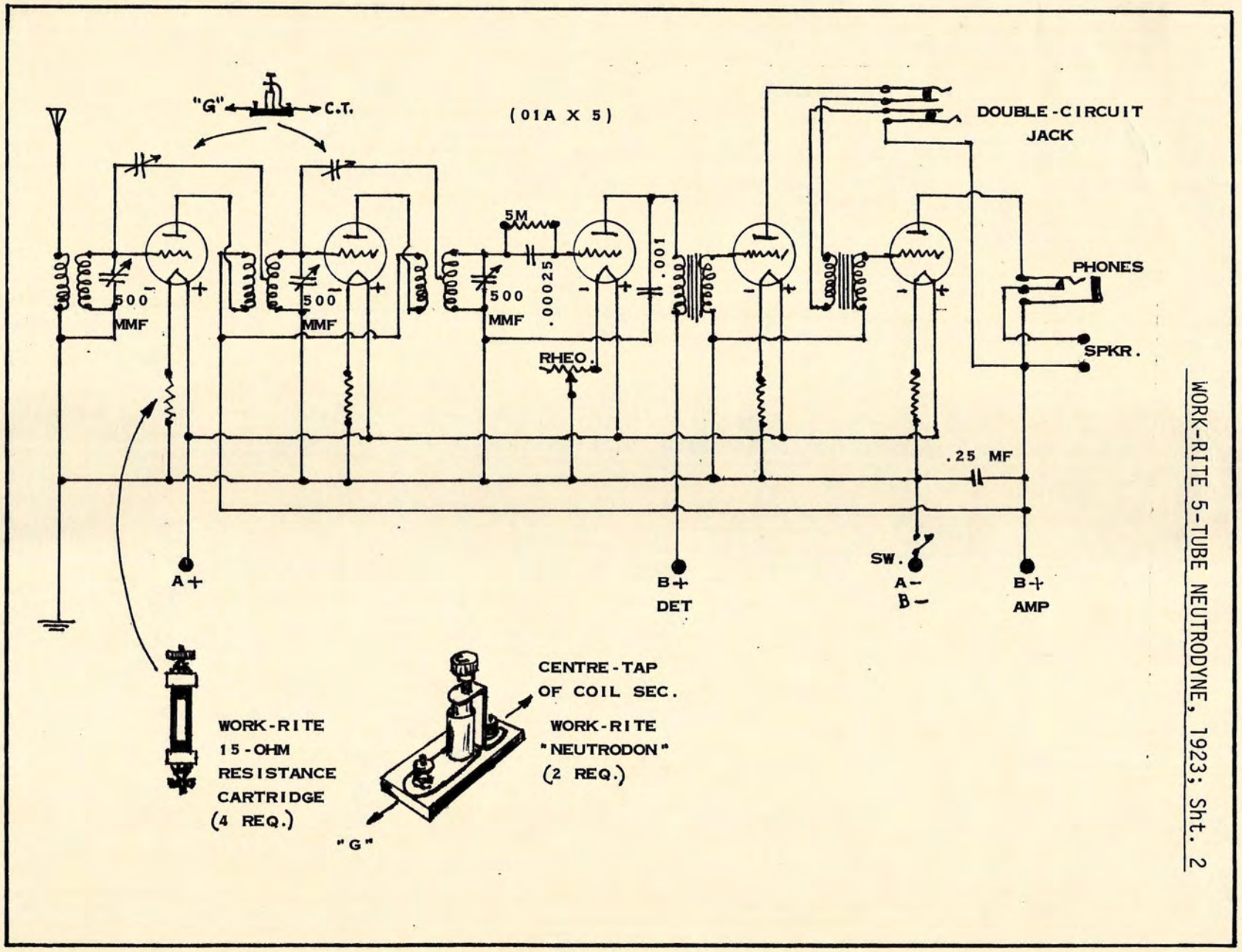

WORK-RITE 5-TUBE NEUTRODYNE, 1923; Sht. 2

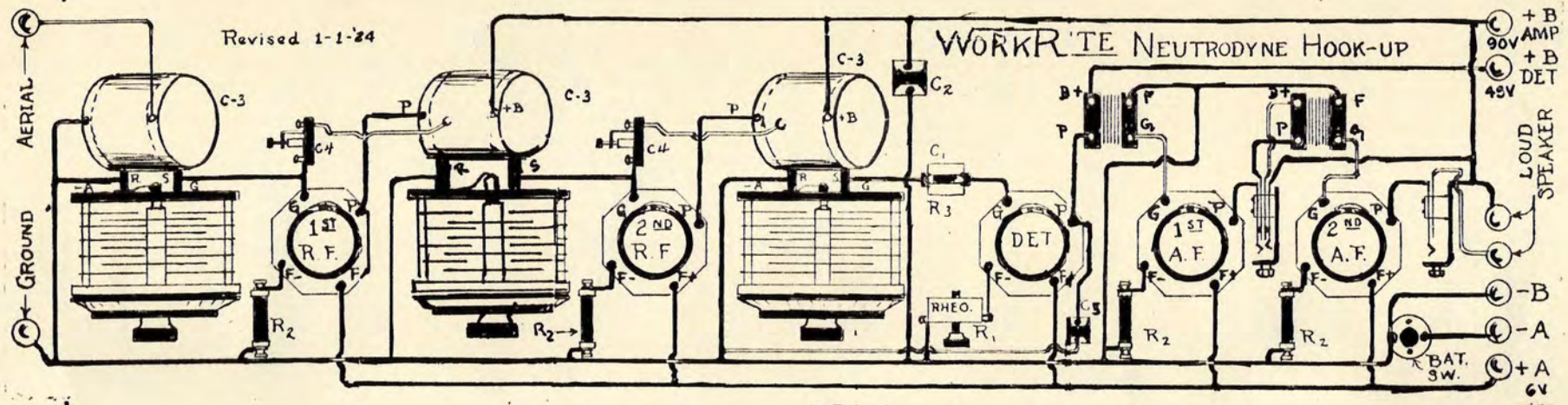

This is a reconstruction of the original pictorial diagram issued by WORK-RITE in January, of 1924.

R1 = 10-ohm Rheostat (for 01A tubes).

R2 = WORK-RITE 15-ohm Cartridges (4)

C1 = .00025 mfd Grid Condenser.

C2 = .001 mfd By-Pass Condenser.

C3 = WORK-RITE "Neutroformers" (3).

C4 = WORK-RITE "Neutrodons" (2).

JEFFERSON AF Xfrms. (2).

Double-Circuit Jack; YAXLEY.

Single-Circuit Jack; YAXLEY.

Speaker Terminal Posts Optional.

Use of .25 mfd capacitor Optional.

C5 = .25 mfd By-Pass Condenser.

NOTE: The 15-ohm cartridges shown were for using V99 tubes with a FIL voltage of 6VDC; they are not required if you use 01A tubes.

WORK-RITE NEUTRODYNE, 1923: Sht. 3

SUPER-ZENITH RECEIVER, 1926

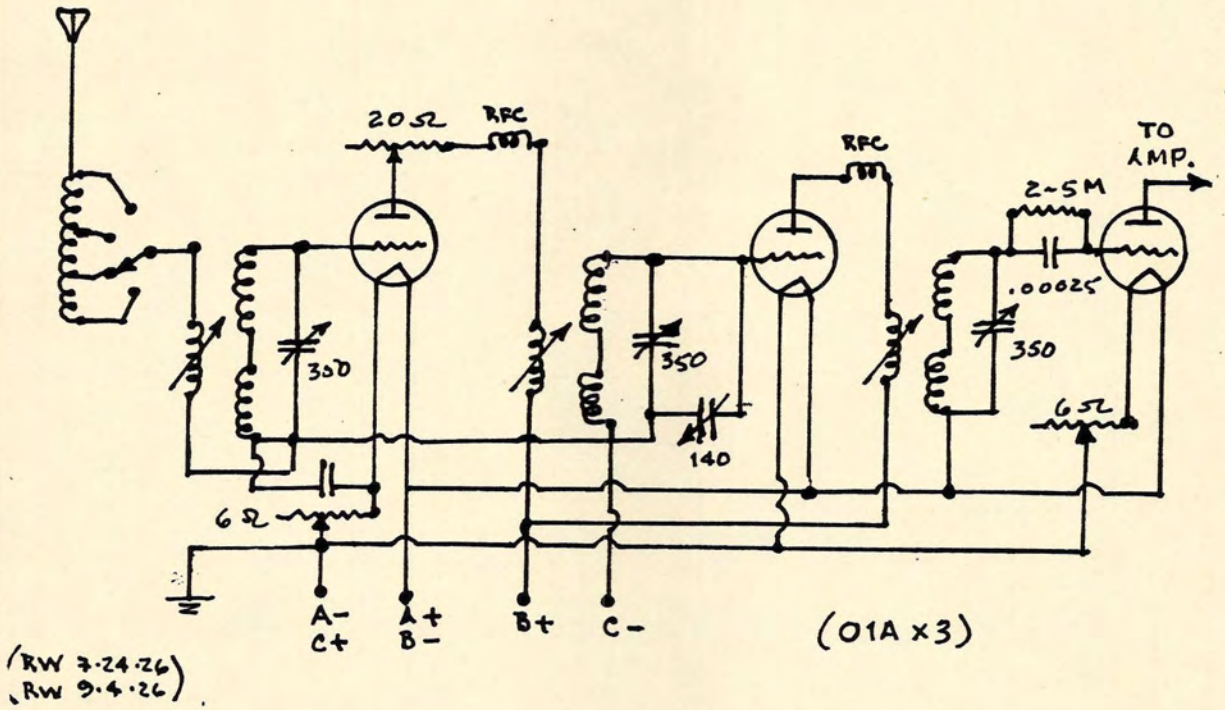

Beyond Rider!

The author and the publishers take pleasure in announcing that Howard W. Granoff has been selected as the exclusive distributor for United States sales of these unique Sketch-Books and Monographs, and other related writings of the author - D.H.MOORE.

Comments and suggestions from readers of these dedicated works are always welcome, and will be given an immediate hearing, with an eye to improving future editions. While these unique Sketch-Books and Monographs are the labour of one man, the vintage radio hobby remains, as with any legitimate hobby, a shared enthusiasm. These works, then, are a sharing of one man's affection for vintage radio.

Olde Tyme Radio Co.

2445 LYTTONSVILLE RD.

SILVER SPRING, MD.-20910

(301) 585-8776

OTHER PUBLICATIONS AVAILABLE

THE VINTAGE RADIO IDENTIFICATION SKETCH-BOOKS of D.H.MOORE:

Vol. I	- *INTRODUCTORY ESSAYS*	$23.50
Vol. II	- *BROADCAST RECEIVERS (2VOL.)*	49.95
Vol. III	- *SHORT-WAVE RECEIVERS*	23.50
Vol. IV	- *POWER SUPPLIES & AMPLIFIERS*	23.50
Vol. V	- *HARDWARE & ACCESSORIES*	23.50
Vol. VI	- *EARLY TEST EQUIPMENT*	20.95
Vol. VII	- *GENERAL TECHNICAL DATA*	22.50
Vol. VIII	- *THE EARLY YEARS: 1910-1925*	23.50

SPECIALISED PUBLICATIONS:

THE RCA CATACOMBS: *A Practical Treatise*	$16.50
THE MYSTERIOUS REFLEX	22.50
RESISTANCE-COUPLED AF AMPLIFIERS TREATISE	15.25
SUPER-HETS OF THE TWENTIES	26.95

MONOGRAPHS ON INDIVIDUAL MARQUES: $16.50, Each.

PILOT	*BREMER-TULLY*	*ULTRADYNE*
SCOTT(Early)	*INFRADYNE*	*STROBODYNE*
REMLER/BEST	*VICTOREEN*	*SILVER-MARSHALL*
SARGENT-RAYMENT	*BROWNING-DRAKE*	*HAMMARLUND/NATL*

Other MONOGRAPHS are in preparation and will be announced. Prices subject to change without notice. All books are shipt post-paid within the continental United States.For additional information, to place orders, etc., contact the publishers or OLDE TYME RADIO CO., 2445 Lyttonsville Rd., Silver Spring, Maryland - 20910.

The Editorial Group, Ltd.

D.H. MOORE, ADI
DIRECTOR

"Specialists In Technical Documentations"

P.O. BOX 521
PALO ALTO CALIF.
94302